TABLE OF CONTENTS

Page

2. Introduction and General Description
2. Compatibility with Receivers, Monitors & Printers
3. Physical Description
4. Optional Accessories Available
4. Specifications
7. Installation
11. Operating the M-600
11. Status Line
13. Key Pad Functions
14. Other Controls
15. Morse Operation
16. RTTY Operation
19. Auto-Start & Sel-Cal Operation
20. Bit Inversion
23. Screen Print Feature
25. ASCII Operation
25. Diagnostic Operation
26. TOR Operation
31. Miscellaneous Notes
33. SEL-CAL Programming
34. Alignment Instructions
36. Video Fonts
37. Limited Warranty

INTRODUCTION

This manual provides users with information necessary for proper installation and operation of the INFO-TECH M-600 in normal operating situations. Additional information on specific operating and installation situations may be received by writing the factory or calling during regular business hours (813, 474-9518 - 9AM - 4PM, Monday thru Friday).

GENERAL DESCRIPTION

The INFO-TECH M-600 will provide a video and/or hard copy, output of Morse, Baudot, ASCII, and TOR codes when attached to a communications receiver and a video monitor and/or printer.

This converter has many features not found on other units of its kind. These features include:

(a) Bit inversion decoding of Baudot codes

(b) Decoding of the TOR codes

(c) User selectable video display features including weather symbols.

(d) A unique "screen print" feature which allows the user to get hard copy of received data as long as it remains on the screen (a big paper saver for certain frequency watchers).

COMPATIBILITY WITH RECEIVERS, MONITORS & PRINTERS

RECEIVERS

Any good communications receiver will suffice for use with the M-600. However stability, sensitivity, and selectivity are the most important attributes of a good RTTY communications receiver.

The audio output of the receiver is used to drive the M-600, thus it may be connected to the speaker, earphone, recorder, or 600 ohm, output of the receiver for proper operation.

VIDEO MONITORS

As the video display output is a fairly wide band signal, it is recommended that a 12" high quality video monitor be used with the M-600.

A monitor, whose specifications indicate that it will display a 25 line x 80 character display, will perform properly.

Video monitors that are known to work will with the M-600 are the Heath/Zenith ZVM-121, and the Sanyo VM4512.

The use of a "converted TV set" is not recommended because of the inherently poor bandwidth of the TV and the potential for shock hazards with a non transformer isolated TV.

PRINTERS

The standard M-600 will drive any ASCII or Baudot printer that will interface to a 20 or 60 ma. current loop, RS232C level, or MIL188A level and operate at speeds or 60, 66, 75, 100 wpm in Baudot or 110, 150, or 300 Baud in ASCII.

When using current loop driven printers with the standard M-600, a current limited loop supply must be furnished.

If the M-600 is equiped with its optional loop supply care should be taken that no additional loop supplies are used in that loop circuit.

A 2K printer buffer and a handshaking line is provided for those ASCII printers that cannot accept continuous data.

The 2K printer buffer also provides the ability to down-convert speeds so that printers of slower speeds may be used with high speed inputs.

A parallel ASCII printer output is available as an option.

PHYSICAL DESCRIPTION

The M-600 consists of a main board which contains all of the Microprocessor, digital and power supply circuitry. Two, plug-in, boards provide the analog demodulation of the input signals.

The main operation of the unit is controlled by a 4x4 keypad on the front panel with additional control provided by two potentiometers and 10 toggle switches all located on the front panel.

All input and output jacks are on the rear panel.

Printer mode and speed, and video format, is controlled by 5 dip switches located on the main PC board.

The all aluminum cabinet is 3½" high x 16 3/8" wide x 10 3/4" deep exclusive of rubber feet and rack handles.

The M-600 will operate from 115 or 230 V.A.C. 50 or 60hz., and is normally shipped for 115 V.A.C. The change to 230V involves simple jumper changes on the main board.

OPTIONAL ACCESSORIES AVAILABLE

Self regulating current loop supply:

Supplies the proper voltage and current to operate 20 or 60 ma. printers. This is a factory installed option.

Rack Mounting Kit:

Consists of a pair of side brackets and hardware to adapt the M-600 for standard 19" relay rack mounting.

Parallel Printer Drive:

This accessory allows the M-600 to drive most of the currently popular parallel ASCII printers (Epson, Centronics, etc.). This option is factory installed and comes with a matching plug for the M-600.

SPECIFICATIONS

Modes & Speeds handled

ASCII - 75, 110, 150, 300, 600 & 1200 Baud

BAUDOT - 60, 66, 75, 100, 132 wpm

TOR - ARQ & FEC Functions (receive only)

MORSE - 5 to 120 W.P.M. auto ranging

BIT INVERSION - Baudot only - decodes any combination of bit inversion security codes.

Outputs

Video - Composite video 1.5V p-p, negative sync, 5x7 dot matrix upper case ASCII character set. (Additional special weather bureau symbols are displayed when weather font is selected), 16 or 25 lines of video, 36 or 72 characters per line. Scrolling, no breakup of words of less than 5 characters at end of line.

Printer Drives - Isolated loop (20 or 60 ma), MIL188, RS232 levels and optional parallel ASCII, all with handshaking.

Printer Modes & Speeds

Baudot 60, 66, 75, 100 wpm

ACSII 110, 150, 300 Baud

Parallel ASCII (Optional)

Inputs

Audio - 4 to 600 ohms .25V p-p.

RTTY Aux. - TTL Levels (mark = +5V).

Morse Aux. - TTL Levels (key down = ØV).

Demodulators

TOR, RTTY (thru 110 Baud) - Features separate active filter demodulators for each tone of three fixed shifts (170,425,850 hz) and a separate variable tuning space filter for non-standard shifts (300-950 hz), 100hz nominal bandwidth (high tone set only).

ASCII (110 Baud & above) - Features a separate PLL demodulator (std = 1000hz shift centered on 1700hz). User adjustable for tone pairs.

MORSE - PLL demodulator, centered about 1000hz., with excellent dynamic range and tracking ability. 460 hz nominal bandwidth.

OTHER FEATURES

Keyboard Selectable Features

Dual video format - Features standard upper case ASCII characters of special weather symbols.

Sel Call Display - Allows actual sel cal codes to be displayed on screen.

Screen Print - Transfers on-screen data to printer output for "after the fact" hardcopy.

Speed Readout - Reads baud rate of incoming ASCII or Baudot RTTY.

Multiple Scroll Inhibit - Prevents multiple line feeds from displaying on screen or printer page, minimizing the wastage of screen room or paper.

Unshift on Space - Causes unit to automatically shift to "letters" case in Baudot, upon receipt of space character.

Self Test System - Unique, built-in, testing for RTTY and Morse system checkout.

Toggle Switch Selected Features

Sel-Cals - Choice of three user specified factory programmed sel calls for printer control.

Auto-Start Mode Select - Provides selection of four choices of auto-start modes.

Auto-Threshold Control - Provides for selection of Auto-threshold circuit for better printing during fading conditions (RTTY only).

Active Filter Select - Selects mark only, space only, or both, active filters in the RTTY demodulator.

Normal or Reverse phasing select.

Switching Threshold Select, wide or narrow, effectively controls switching bandwidth of RTTY Demodulator.

Printer Select - Switches printer between auto-start and off line conditions.

Other Features

Status Line - Bottom line on video screen displays status of functions controlled by key pad.

Printer Buffer - A 2000 character printer buffer is used for reasonable down conversion of speed and storage for handshaking.

Loop Supply - (Optional at extra cost) A factory installed option to provide, automatically adjusted, loop current for 20 ma. or 60 ma. loop circuits.

Indicators

Ten step LED Bar Graph for plus-plus tuning

Mark and Space LEDs

Power "on" LED

Auto-Start LED

Buffer Full LED

Morse Lock LED

Hi Baud Tuning LED

Peak Tuning LED

"Input Limiting" LED

Rear Panel Jacks

Isolated Loop	Auto-Start
Parallel Printer (Optional)	MORSE/RTTY Aux.
Serial Printer	Aux. Tuning scope

Options Available

Parallel Printer output	
Built-in Loop supply	Rack Mounting Brackets

Power Requirements - 115/230 VAC 50/60 hz 25 watts

Size - 16-3/8" wide x 3-1/2" high x 10-3/4" deep

Weight - 9 lbs.

INSTALLATION

The basic installation of the M-600 is simplicity itself. If your power mains are 115V you may immediately connect your M-600 to the mains.

To convert the M-600 to 230V see Fig. 1.

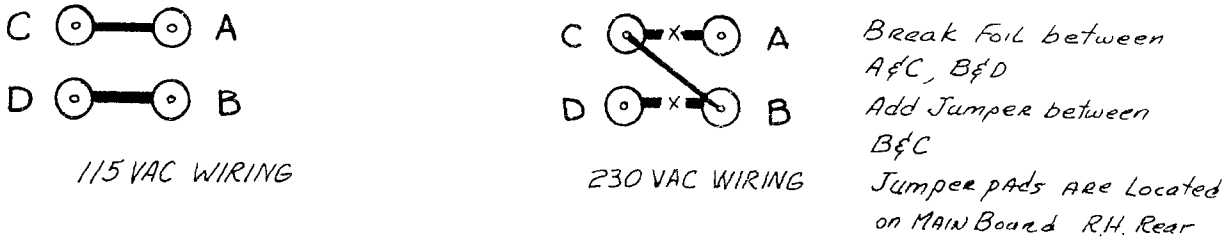

Fig. 1 Conversion from 115 V.A.C. to 230 V.A.C.

RECEIVER CONNECTION

The best point of connection to your receiver would be the recorder output, or line output. If your receiver does not provide such outputs, then you may connect the M-600 "INPUT" to the earphone or speaker outputs using the 2 conductor phone plug (supplied) and an appropriate length of two conductor wire. Shielded wire may be used for this cable.

VIDEO MONITOR CONNECTION

The video monitor is connected to the "VIDEO" jack on the rear panel using the RCA type pin plug supplied. Be sure that your cable to the video monitor is good shielded coax. The use of double shielded coax (RG-223/U, RG71B/U, RG62B/U, RG55/U) will effectively eliminate any video radiation.

VIDEO DISPLAY SELECTION

The user has his choice of 4 different video display formats (16 or 25 lines) (36 or 72 characters per line). The selection of this display is determined by the settings of 2 dip switches located on the main PC board.

To access these switches you must remove the top cover of the M-600 (12 screws) and locate the 5 position dip switch (near the left hand front corner).

Switches 2 and 5 control the video display selection - they are set as follows:

Characters	x Lines	Switch 2	Switch 5
36	16	on	on
72	16	on	off
36	25	off	on
72	25	off	off

Note: Power should be off when setting these switches. The other three switches in this bank are used for printer mode/speed selection and will be discussed in the next section.

PRINTER CONNECTION

There are two printer drive outputs available on the standard M-600. The following paragraphs discuss the interface to these drives.

CURRENT LOOP DRIVER (LOOP)

The current loop driver in the M-600 is set up to key a standard 60 ma, high voltage current loop.

Fig. 2 illustrates the wiring of a cable to interface with the loop driver.

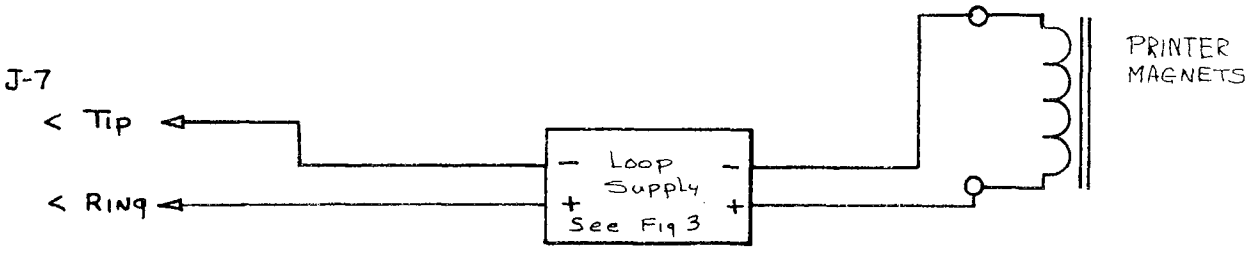

Fig. 2 Wiring of External Loop Circuit

All current loop systems require a current regulated loop supply. The standard M-600 does not contain a loop supply and thus a loop supply will have to be provided externally.

Fig. 3 illustrates a schematic of a simple current regulated loop supply.

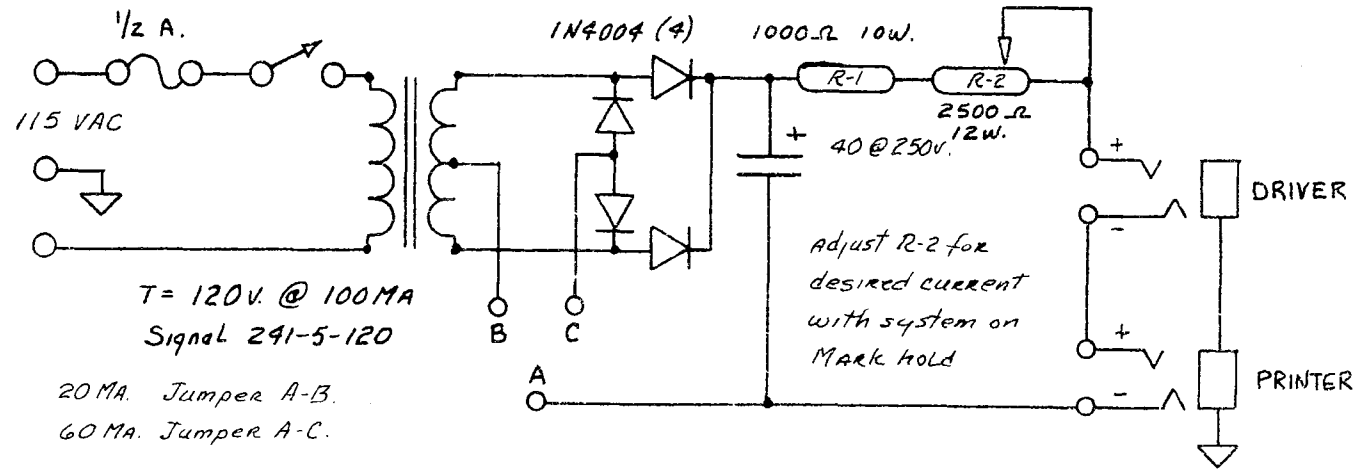

Fig. 3 Universal, Current Limited Loop Supply

RS-232/MIL-188 DRIVER

The "Serial" jack on the rear panel of the M-600 is the printer drive jack for RS-232/MIL-188 serial printers. The unit is normally shipped with the jack strapped for RS-232 levels (Mark = -11V, Space = +11V).

Fig. 4 illustrates the conversion of this jack to MIL-188 levels (Mark = +6V, Space = -6V).

Connect the input of your printer to the tip of a 3 circuit phone jack (supplied) and the signal ground of the printer to the shell of this jack. The ring of this jack is an auto-start line and the use of auto-start will be discussed in a later section.

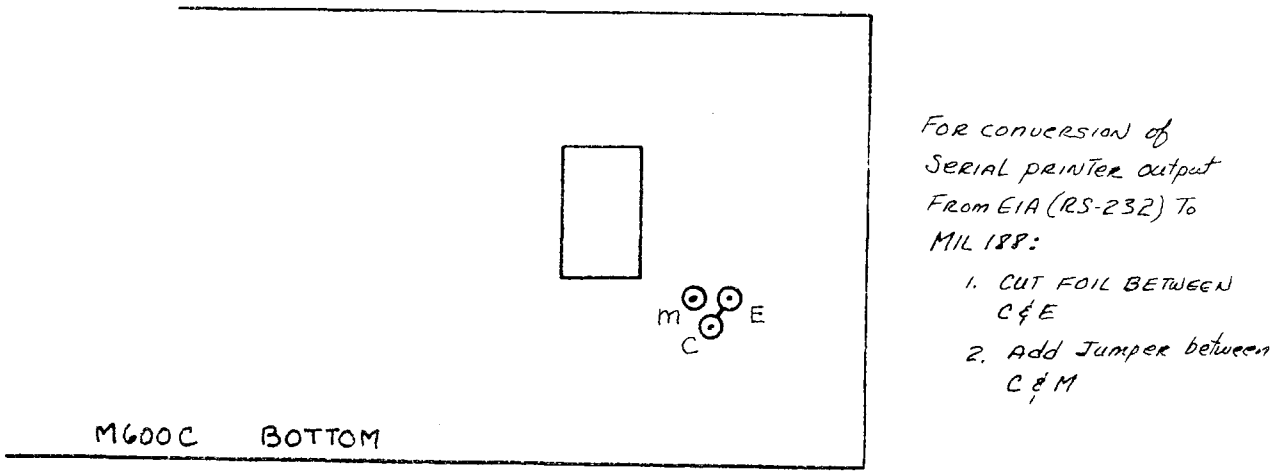

Fig. 4 Conversion of printer output from EIA(RS-232) to MIL-188

OPERATING THE M-600

The power switch is located in the upper right hand corner of the toggle switch bank, placing this switch in the "up" position applies power to the M-600.

OPERATING CONTROLS

The following functions are controlled by the 4x4 keypad located on the front panel.

The operation of the keypad involves stepping thru a sequence of functions - for instance each press of the "A" keypad will step through the various ASCII speeds available thus one pad can be used to select several operations.

THE STATUS LINE

The bottom line of the video display is used as a status line. The status line is a visible indicator of operations selected by the keypad. The first section of the status line indicates the mode of operation selected:

BAUDOT	TOR-ARQ
ASCII	TOR-FEC
MORSE	

The next section indicates the speed of operation. If Baudot is selected, it can indicate 45, 50, 57, 75, 100 (Baud). For ASCII it may indicate 75, 110, 150, 300, 600 or 1200 (Baud).

For Morse it can indicate:

SLOW	(4-30 wpm)
MED	(8-50 wpm)
FAST	(15-120 wpm)

For TOR-ARQ & FEC no speed indication will be given.

The third section indicates the shift set-up by the demodulator either 170, 425, 850hz, "VAR" for the selection of the variable space channel, or BEL which is automatically selected when Baud rates of 150 and above are selected (RTTY only).

The fourth section will show UOS if the unshift on space feature is selected otherwise it will be blank (Baudot only).

The fifth section will show a "O" if the weather video font has been selected or a : if the regular video font is selected.

The sixth section will indicate MSI to indicate that the multiple scroll inhibit feature is selected (RTTY only). When this feature is not selected this area will be blank.

The seventh section will always show SC for SEL CAL. Following this section the numbers 1, 2, and 3 will be shown if those particular sel-cals are received. If any of those sel-cals are not active. their positions on the screen will be blank.

The final section is the BIT INVERSION scan section (Baudot only). There are 5 locations corresponding to the 5 bits of the Baudot code. When a "O" appears in one of these locations it indicates that that particular bit is not inverted. A number "1" would indicate an inverted bit. This section is blank when bit inversion is not selected.

A typical status line display is shown below:

BAUDOT 100 425 UOS : MSI SC 1 3

This display indicates that you are in Baudot at 100 Baud 425hz shift, your Unshift-on-Space function is in operation, your video is set for normal font, the multiple scroll inhibit feature is on, SelCals 1 and 3 are selected and no bits are inverted.

Another typical Status Line may appear as follows:

BAUDOT 50 425 : MSI SC 01000

This indicates that you are in Baudot at 50 Baud, 425 hz. shift, Video font is normal, Multiple scroll inhibit feature is ON, No SEL CALS are active, Bit Inversion is selected, and BIT 2 is inverted.

KEY PAD FUNCTIONS

"A" Selects ASCII Mode and speeds of 75, 110, 150, 300, 600, 1200 Baud.

"B" Selects Baudot (Murray) Mode and speeds of 45, 50, 57, 75, 100 Baud (60, 66, 75, 100, 132 wpm).

"C" Selects C.W. (Morse) mode. The speed of operation in Morse is automatic, between 4 and 120 wpm, in these steps: SLOW speed is 4-30 wpm, MEDIUM speed is 8-50 wpm, and FAST speed is 15-120 wpm.

"D" TOR - Selects between ARQ and FEC modes of TOR codes. Note: (selection of TOR automatically sets up the proper speed of 100 Baud which cannot be changed).

"1" Speed readout (ASCII or Baudot only) - a single press of this key will result in an immediate printout of "BAUD=" and after a short period a number will appear following the "=" which will be the speed, in baud, of the received signal.

"2" Multiple Scroll Inhibit (MSI) - eliminates multiple scrolls (line feeds) on the screen and/or printer. A paper and screen room saving device when the sending station sends more than one line feed between lines of text. When this function is "on" an indication of "MSI" will appear on the status line.

"3" SEL-CAL Display - causes the actual contents of the 3 preprogrammed SEL CALS to be displayed on the screen.

"4" Bit Inversion Scan, start/stop. Initiates the scanning of the 32 possible bit inversion combinations - a second push of this switch will discontinue the bit-inversion process.

"5" Bit Inversion Scan, wait/resume. Allows the inverted set to be held at that point while the viewer determines if that set is the proper set. A second push of this button will let the scan resume.

"6" Bit Inversion, step. Allows the user to "step through the 32 different combinations, one step for each press of this key.

"7" Wx (Weather font) - switches the video letter set between the regular 64 character ASCII set and a special weather bureau symbol set.

"8" UOS (unshift on space) - When on, it causes the output to automatically shift to "letters" case (in Baudot) upon receipt of a space character.

"9" Demodulator Shift Select - Steps through 170, 425, 850, VAR (variable shifts), and BEL (Hi Baud) for 45 thru 110 Baud. Above 110 Baud the Hi Baud (BEL) demodulator is automatically selected, and others may not be enabled.

"*" Diagnostics - Pushing this pad causes the diagnostic system to go into operation in Morse, Baudot and ASCII.

"0" Screen Clear - Clears video screen.

"#" Print Video Page - Causes all data currently on the video screen to be outputed to the printer.

The following functions are controlled by seperately labeled switches or pots.

"Level" Pot - Controlls the amount of signal applied to the demodulators.

"Var Pot - Varies the tuning of the variable space filter for operation on non standard shifts.

Wide-Narrow Toggle - Effectively controls the bandwidth of the "RTTY" demodulators.

Normal/Reverse Toggle - Switches the sense of the digital input to the Microprocessor on RTTY.

SO/MS/MO Toggle - Selects either the Space filter only, Mark and Space filters or the Mark filter only during RTTY operation.

ATC Toggle - Selects the automatic threshold circuit for operating during fading conditions where one signal (Mark or Space) might fade out.

SC-1,2,3 Toggles - Selects any of the three preprogrammed sel cals.

Auto-start Mode Select Toggle - Selects any of the four modes of auto-start available.

Printer "on" Toggle - Controls the auto-start line and thus the printer when connected to the auto-start system.

Indicator Lamps

There are 10 LED indicators on the front panel that indicate certain functions.

Each lamp is labeled - their functions are as follows:

PWR - Indicates power to set is "on".

AS - Indicates auto-start signal is present.

MK - Indicates a Mark Tone is present.

CW - The CW tuning light "on" indicates "key down".

SP - Indicates a space tone is present.

BUFF - Indicates a buffer overflow.

LIM - Indicates that the input audio amplifier. is in limiting.

HI-BAUD - Indicates proper tuning of Hi-Baud demodulator.

TUNE - A Bar Graph LED that acts as a plus-plus meter. Always tune for maximum movement to the right.

SIGNAL - Indicates proper tuning of the low Baud demodulator signal to the microprocessor.

MORSE OPERATION

With your M-600 connected as in previous sections, turn the AC power switch "on", and press the "C" switch on the keypad. The M-600 is now in the Morse (C.W.) mode. Tune your receiver to a C.W. signal and adjust your BFO or Fine Tuning control for a 1000hz beat note, or until the "CW" led is flashing in time with the incoming signal and the Bargraph LED is indicating maximum.

The "Level" control on the M-600 controls the audio level to the demodulators. Adjust the input level control so that the signal just barely peaks at the last LED on the Bar Graph Display, and the "LIM" LED is just lighting.

Excessive audio levels will cause misprinting and poor adjacent channel selectivity.

The M-600 takes a short time (3-8 characters) to "lock-on" to the code being sent and after it is locked you should see the printing on the screen. A good frequency on which to learn Morse reception is WCC at 13.033 MHZ. This is a marine CW station that operates around the clock and normally sends "good" code. The M-600 morse section will decode CW only when it is properly sent with reasonably constant speed and character spacing.

RTTY OPERATION (BAUDOT)

The Baudot or Murray code is the most common type of RTTY code in use today, comprising about 80% of the RTTY signals you will hear. Not all of these signals are decodable by the M-600 because of the use of special encryption of the Baudot code by the sender.

RTTY RECEPTION PROBLEMS

Perfect copy of H.F. RTTY transmissions is not guaranteed just because it is a code not subject to interpretation. There are several "natural" obstructions to perfect copy. Basically these obstructions fall into the three following categories:

1) Multipath distortion - Caused by the signal from the transmitter arriving at the receiving antenna via two different paths, at slightly different times, which causes the mark & space pulses to be smeared, stretched, or over-lapped to the extent that they are decoded improperly.

2) Fading and Selective Fading - Caused by the ionospheric propogation of H.F. signals.

   Naturally if the signal fades out completely the information not received during the fade will not be printed.

   Selective fading, wherein only the mark or space appear to fade out will also cause loss of intelligence in the receiving installation.

3) Noise - Large scale static crashes and impulse noise may both interfere with RTTY reception.

   The large static crash can obliterate the signal and

impulse noise, who's pulse width closely approximates the bit-width of the marks and spaces of the RTTY signal, can fool the demodulator system into printing errors.

Note, that in all cases of the afoementioned disturbances, greater errors can occur when the transmission rate is faster. Thus, most H.F. RTTY occurs at 60 or 66 W.P.M. rather than 100 or 132 W.P.M.

Experimentation with the demodulator controls will enable the user to partially overcome the propogation abnormalities.

Once the signal is properly tuned, there are three variables in the reception of RTTY that must be determined and their determination is simply a matter of quick trial and error.

The three variables are:

Speed - (Baud rate)

Shift - (difference between the mark and space tones sent)

Sense - (whether the signal is 'Normal" or 'Reversed")

As a general rule:

(1) 95% of Amateur RTTY is sent at 45 Baud (60wpm) and 170hz shift.

(2) Commercial press is sent at 50 Baud and 300-500hz shift.

(3) Weather is sent at 74 Baud and 850hz shift.

(4) USIA sends at 74 Baud and 425hz shift.

Set your Receiver up in its RTTY, USB, or CW mode and tune it to 14095 MHZ$\pm$ 10 khz. This is the 20 meter amateur RTTY baud and most signals here are 45 Baud and 170hz shift. Set your M-600 for this mode, speed, and shift (use the "B" key switch for the mode and speed and the "9" key switch for the shift) as indicated on the status line. Set the "Wide/Narrow" switch for WIDE, the SO/MO swicth in the center at "(MS)" and the ATC switch to the "ON" position. Tune your receiver for maximum "S" meter reading on a RTTY signal then adjust the receiver BFO or fine tune so that the M-600 Bar Graph deflects to the right, both "Mark" and "Space" LED's are flashing, and the "signal" LED is on. This indicates proper tuning.

If you are not getting good print on the screen, throw the 'Normal/Reverse' switch to its alternate position. Good print should follow.

SPEED READ-OUT OPERATION

If you are not sure of the speed (Baud Rate) of the incoming signal you can use the "Speed Read-Out" feature of the M-600. Assuming the receiver is properly tuned and the proper shift is selected simply press the "1" keypad. Immediately the screen will display "BAUD=" and a short time later the incoming data rate in Baud will be displayed on the screen.

The time required for the completion of this operation will depend upon the incoming speed.

Note: During the speed read-out routine, the keypad is inoperative.

If the M-600 should appear to lock up during the speed read-out routine, you may return to normal operation by cycling the power switch (RESET).

"VAR" SHIFT OPERATION

If you cannot get both the mark and space lights to flash properly no matter how you tune, you may be receiving an "odd" shift.

To demodulate this odd shift you must select the "VAR" shift by toggling through the sequence on "9" keypad until VAR appears on the status line. You then adjust the BFO on your receiver so that the mark light is flashing properly and adjust the "VAR" control (front panel of the M-600) so that the space LED flashes properly.

PROPER USE OF THE WIDE/NARROW, MO/SO AND ATC SWITCHES

Wide/Narrow Switch - As a general rule the Wide/Narrow switch should be in the "wide" position for all Baud rates above 50 Baud, and in the "Narrow" position below 57 Baud.

MO/MS/SO Switch - This three position toggle switch selects the low baud rate demodulator filters to be used.

MO means only the Mark active filter is selected.

SO means only the Space active filter is selected.

MS means that both the Mark AND space filters are selected.

The preferred position is "MS". However, there may be times when only a single filter will give you better reception - (adjacent channel interference etc).

ATC Switch - The ATC circuit is designed to provide for correction of bias distortion which may be caused by the propogation of the HF signal. It will attempt to correct for some differential fading and may be used at all times.

In the case of hand typed" RTTY it should be turned off as the character rate will generally be too slow for proper correction. Little "hand-typed" RTTY is encountered except on the Amateur bards.

Level Control - The "Level" control is the input audio level setting control and as such determines how much audio goes to the various demodulators. In normal HF operation (Morse & RTTY) it should be set so that the "LIM" LED is just beginning to glow. This indication shows that the input amplifier is on the verge of going into limiting which is usually undesirable for HF reception, but desirable for VHF operation.

Auto-Start and Sel Cal Operation

Auto-start operation in its basic form has the demodulator turn on your printer when a signal is received. The M-600 carries the auto-start operation to a much finer degree.

Prior to the output of any data to the printer, the auto-start LED light and auto-start output turns on. These will stay on for a while after there is no more data to be sent to the printer.

The Auto-Start switch determines when received information will be directed to the printer output.

The three positions operate as follows:

A - 1) If any of the three sel-cal switches on the front panel are turned on, then one of the selected sel-cals must be active (that number appearing in the sel-cal area of the status line).

eg.: If SC-2 is on then '2' must appear after 'SC' on the status line.

If SC-1 and SC-3 are on then '1' and/or '3' must appear after 'SC' on the status line.

2) If all three sel-cal switches are off, then a 'space' character must be received. Data will stop going to the printer after 16 characters have been received since the last 'space' character. (Will start again when another space is received.)

B - Received data with the 'signal' LED on. (If 'signal' LED is pulsing or flickering, data to printer will be intermittent).

C - Any and all received data, whether valid or not.

BIT INVERSION

Bit inversion of the Baudot code is commonly used to eliminate the interception of a message by a casual listener. Simply, the user inverts 1 or more bits of the normal 5 bit code which causes standard teleprinters and video decoders to print garbage.

There are 32 possible combinations of bit inversion so that manually searching for the right inverted combination might be awkward, even if the user had the additional inverting electronics. The M-600 contains a bit inversion decoding system that, on command, will search through the 32 possible combinations and display that combination on the screen. It is up to the user to stop the search when the data on the screen appears "unscrambled".

To start the scan press "4" on the keypad. This will start the scanning of the 32 possible combinations. If a combination would appear to be proper or you wished to watch the screen a bit more you may push "5" which will cause the scan to wait, a second push of "5" will allow the scan to resume. The second push of "4" will take the M-600 out of the bit inversion mode.

Switch "6" will allow you to manually step thru the 32 different combinations one step at a time.

Some likely spots for bit inversion transmissions are:

13990. KHZ

7603.5 KHZ

7790. KHZ

10,655. KHZ

13,830. KHZ

18,050. KHZ

23,035. KHZ

11,106. KHZ

14,353.5 KHZ

PRINTER SWITCH

When the switch is in the"off" position the auto-start circuitry cannot turn on the printer.

When the switch is in "Auto" position, control of the Auto-Start line is passed over to the Microprocessor which is itself controlled by the Auto-start select switch.

The M-600 does not have a direct circuit to turn on the power to a printer but does furnish an output that will operate a printer power control.

A typical control that can be easily built for auto-start printer control is shown in Fig. 6.

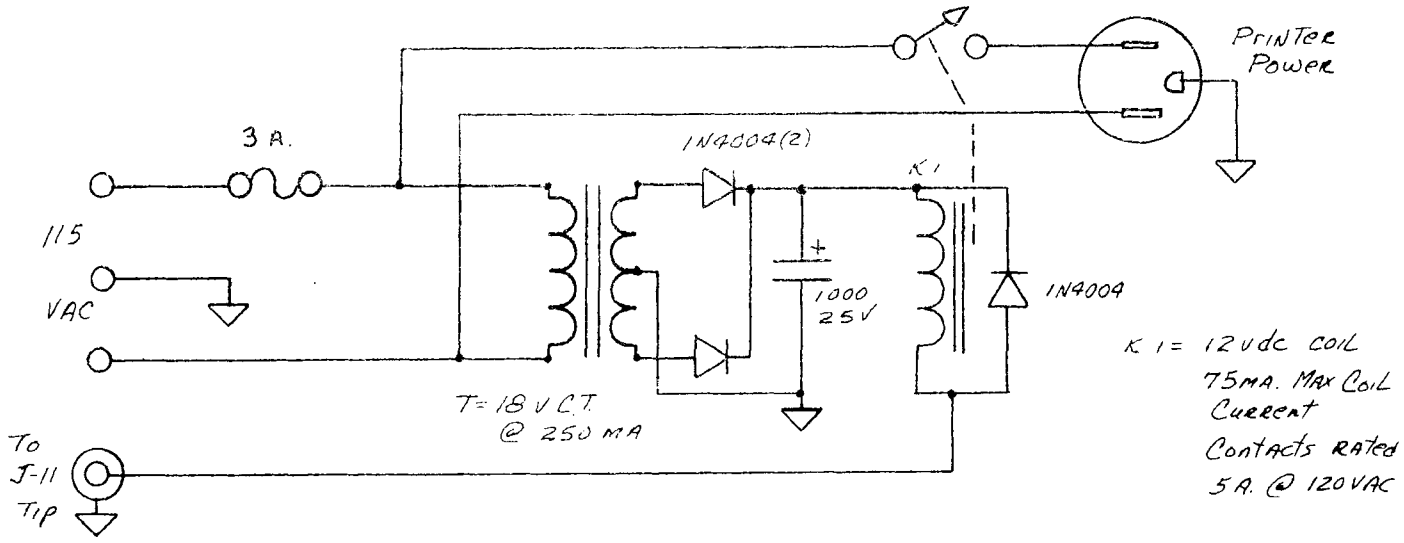

Fig. 6 Auto-start printer control

(A similar unit is available from the Digital Electronic Systems for under $40.00 - ask for the M-65)

SEL CAL

Sel-Cal (Selective Calling) is a special feature within the M-600. A sel-cal code is a multiple letter code, the purpose of which is to activate a printer to record a special incoming message. An example of a turn on Sel-Cal code would be ZCZCKMIA. An example of a sel-cal turn off code would be NNNN (a standard in all services).

If the above codes are programmed into the M-600 as sel-cal 1 then whenever the sel-cal 1 switch is on the M-600 would respond to the receipt of that code by turning on the printer and printing everything sent until the turn off code (NNNN) is received.

The M-600 memory has space for three sel-cal codes. These codes may only be programmed at the factory. If you wish, you may order a special 2732 (IC) with the sel-cals of your choice programmed into it.

PRINTER OUTPUT SPEED AND MODE SELECTION

To set-up the M-600 for the printer you will be using, you must remove the top cover (12 screws) and set 3 dip switches. These switches are located near the left front corner of the main PC board.

Switch 1 determines if the printer output will be ASCII or Baudot.

Switch 2 & 3 determine the printer speed.

The following chart indicates the proper set-up for Switches 1, 2, 3 for the various printer speeds and modes.

Fig. 5 Printer Mode-Speed Selection

Mode	Speed	Switch 1	Switch 3	Switch 4
Baudot	45	off	off	off
Baudot	50	off	off	on
Baudot	57	off	on	off
Baudot	75	off	on	on
ASCII	110	on	off	off
ASCII	150	on	off	on
ASCII	300	on	on	off
ASCII	parallel*	on	on	on

*(Do not use unless parallel printer option is installed)

Note: Power must be off when setting these switches.

HANDSHAKE LINE (J8-Ring)

Handshaking, for our purposes here, can be defined as a signal from a printer to the M600, telling the M600 to stop sending data to the printer during a print cycle.

Many line printers, such as the MX 80 series cannot accept data while it is actually printing. Thus the sending device must store the data during the printer's print cycle.

The printer buffer will store data for all printers attached to the M600 any time that the handshake line (J8-ring) is not low.

If your printer does not require handshaking then this line must be grounded or no output will appear from any of the printer drivers.

As a matter of fact - all parallel printers (and many of the modern line printers without large internal buffers) will require handshaking.

SCREEN PRINT FEATURE

The purpose of the screen print feature is to allow a listener to be able to get hard copy of data that has already been placed on the video screen.

Normally, if the listener attempts to get hard copy of incoming data, his printer will print the data as it is entered on the bottom line of the screen.

This method works but requires the printer to be activated at all times which uses lots of paper and is a bit noisy.

The M-600 screen print feature will allow the listener to "edit" what his printer actually prints by waiting until something of interest appears on the screen, and then activating the screen print system.

The screen print feature is turned on or off by pressing the "#" key. When 'screen print' is turned on, all information on the screen is directed to the printer output, regardless of the setting of the auto-start switch.

Printing will begin with the top video line and continue printing all received information until the screen print is turned off again.

If the screen print is turned off before the entire screen is printed, only that information remaining on the screen, which would otherwise have been printed, will go to the printer.

USE OF THE "AUX" JACK (J-10)

The "AUX" Jack on the rear panel provides input to the microprocessor and/or output from the demodulator.

Morse Aux. is J-10 ring

RTTY Aux. is J-10 tip

Ground Aux. is J-10 sleeve

The Aux. Jack may be used to:

(1) Interface a keyboard with the M-600 decoder, video system

(2) Derive the demodulated signal for use with other systems or

(3) Drive the M-600 with an external demodulator.

The maximum potential allowed at this Jack is 5V as the Jack carries TTL levels.

For proper interfacing with the processor Mark will be plus 5 volts on RTTY, keydown will be Ø volts on Morse.

SCOPE OUTPUTS

A Jack labeled "Scope" (J-9) is provided on the rear panel for attachment to an external tuning oscilliscope for RTTY tuning.

For proper hook-up the Mark signal is on the ring and the space signal is on the tip , ground is on the sleeve.

The Mark ring should go to the horizontal input of the scope & the space tip should go to the vertical input.

ASCII OPERATION

The ASCII code is similar to the Baudot code except its character is composed of 8 bits and thus the ASCII character set is broader than the Baudot character set. ASCII is rarely used on the HF Bands except by a few Amateurs and then usually only at 110 Baud.

To place the M-600 in ASCII mode simply press the "A" keypad. The first press of this keypad will put the unit in ASCII at 75 Baud. Subsequent presses will step the system thru 110, 150, 300, 600 and 1200 Baud and then back to 75 Baud.

Both RTTY demodulators, in the M-600, will operate in ASCII through 110 Baud. Above 110 Baud, the Hi Baud demodulator (BEL) will automatically be selected. High Baud rate ASCII (150 thru 1200 Baud) is used on Amateur FM radio at 2 meters and above and also on data channels on the various entertainment satellites.

Diagnostic Operation

The M-600 contains a special diagnostic system that will operate in Morse, Baudot and ASCII mode through 110 Baud. This system should not be accessed when receiving another signal.

The diagnostics check out the morse demodulator (when in the Morse Mode), and the mark channel of the Baudot ASCII demodulator (when in the Baudot or ASCII mode below 150 Baud), the microprocessor system, the video system and if a printer is attached it will check out the printer drivers (printer system will not be tested in the Morse mode).

To operate the Diagnostic System:

1. Select the mode and speed to be checked.

2. Press the * keypad.

3. A read out of A thru Z and 1 thru Ø should be seen on the screen (and printer if attached).

To terminate diagnostic operation, power must be turned off.(Reset)

Note: (1) Morse MEDIUM speed must be selected for the proper operation of the Morse diagnostic routine.

(2) There is no printer output during the Morse diagnostic routine.

TOR

TOR stands for Teleprinting Over Radio, but a more descriptive acronym for this method of communication is the Marconi trade name for their TOR interface: SPECTOR (Single Path Error Correcting Telegraphy Over Radio).

The TOR system of communication, based on CCIR Recommendation 476, is used primarily in maritime service, TOR actually covers two forms of communication, ARQ and FEC, with two variations of the latter: Collective FEC and selective FEC.

Both systems utilize a synchronous character code.

Synchronous codes differ from asynchronous in that the former has start and stop bits added to the beginning and end of each character, positively identifying where each group of bits representing a character starts and ends. Each character is individually and independently synchronized.

Synchronous transmissions, do not have these start-stop bits. They use a continuous stream of data bits and syncronization, to establish where one character stops and the next begins, must be done prior to proper data reception.

Both TOR methods also use a seven data bit code sent at 100 baud. Each character has four marking bits and three spacing bits. It is this feature which allows error detecting. If a received character does not have four marks and three spaces, then an error in the data path has altered one or more bits and the received character can be assumed to be invalid, or not correct.

It is possible for a character which has been altered to appear correct upon reception if two bits are changed, one from mark to space and the other from space to mark, maintaining the 4/3 ratio. While this can and does occur, it is a relatively rare occurrence.

In both TOR modes the M600 will automatically adjust itself to the proper sense (Normal/Reverse) to provide the 4/3 mark/space ratio.

When operating TOR, the sense switch may be placed in either position, but do not change the setting of this switch once operation has begun. Doing so will cause loss of data until the unit re-adjusts itself.

ARQ (Automatic ReQuest for repetition)

A protected (error-free) ARQ communication link can only operate between two stations, both of which take an active part in the link.

The station which transmits data is referred to as the Information Sending Station (ISS), while the other is

the Information Receiving Station (IRS).

In operation, the ISS transmits a group of three characters and then switches from transmit to receive. The IRS will test the received characters for the proper 4/3 ratio and respond with a signal instructing the ISS to either continue, or to repeat the last three character block if an error is detected. The IRS then switches back to receive. The ISS in turn will respond with the indicated block of three characters, either repeat or next. If the ISS detects an error in the IRS's response character, it will transmit a block of three non-printing characters which instructs the IRS to repeat its response character.

At any point in the traffic, either station may signal for a 'change-over'. When this occurs, the two stations exchange roles with the ISS becoming the IRS and vice versa. The 'change-over' occurs when the ISS sends the three characters (not necessarily in the same block:) FIGURES " ? .

The actual ARQ transmission is no less susceptable to errors than any other 100 baud signal. It is by virtue of the error detecting capability, coupled with the ability to demand repetition, that the ARQ link becomes "error-free". The third-party listener retains the ability to test for errors, but cannot request repetition so the error-freedom cannot be expected in the reception by these stations. Furthermore, the third party cannot positively determine whether any group of three characters is a repetition or not.

Tuning ARQ

ARQ stations may be recognized by their unique sounds which are caused by their transmission of data in short bursts.

While the sounds of the IRS and ISS stations are similar, careful listening will detect an audible difference.

The IRS, transmitting only a single, seven bit, response character, will have a characteristic BLEEP..... BLEEP.....BLEEP sound with the "BLEEP's" occurring approximately twice a second.

The ISS transmitts bursts of three characters and exhibits a BEELEELEEP sound also at about two bursts per second.

The signals you receive may be either the IRS or ISS or both as the two stations may or may not be operating on the same frequency.

The M-600 is not designed to decode or interpret the response signals of the IRS.

One of the characters used as an IRS control signal has the same code as 'L' or ')' in upper case, so this character may print when tuned to an IRS.

Also received random noise which, coincidentally, meets the 4/3 mark/space test will be printed. Plain text of any kind will never be printed when the station being received is the IRS station.

When you have properly tuned-in the ISS station and that station is sending non-repetitive data, the correctly received characters will be printed on the screen in bursts of three characters.

If the ISS is sending idle characters (for maintaining sync) there will be no print.

If an error is detected in any of the three received characters in a block, only the valid characters will be printed.

The M-600 also has a feature which compares every group of three characters to the previously received group. If all three are identical, the second group is not printed. While this system is not 100% fool-proof, it helps to eliminate the printing of a group which is repeated. At times it is not uncommon for the ISS to repeat a group 5 to 10 times before it is properly received. Remember that during this time, as well as when the ISS is sending 'idle' codes, the M-600 will appear to have "quit working".

FEC

FEC stands for Forward Error Correction, and there are two types of FEC: Collective (broadcast) FEC and Selective FEC (direct to 1 station only). The only differances between these two are that the selective FEC transmission is sent inverted (3 mark/4 space) and is preceeded by the intended receiving station's call code.

Since the M-600 automatically adjusts for normal/inverted signals, it does not differentiate between these two forms of FEC.

FEC consists of a constant stream of 100 baud data bits preceeded by 40 pairs of phasing signals. The 'error correction' of an FEC signal results from each character in a message being sent twice with four other characters occurring between the first and second transmission of a character.

The precise timing and format that this mode uses is difficult to explain verbally. Suffice it to say that it is a character interleaved time diversity mulitplexing method.

The first time the character is received, it is stored in memory and when the character is received the second time, they are tested for errors and compared.

The table below shows the displayed response to a given character pair.

	Character First Transmission	Character Second Transmission	Display
1)	ERROR	ERROR	'SPACE'
2)	ERROR	OK	2nd
3)	OK	ERROR	1st
4)	OK both same	OK	2nd (same as 1st)
5)	OK not same	OK	'SPACE'

Because of the number of variables, the time required to sync to an FEC signal is longer than for ARQ, and much longer than asynchronous transmissions.

After a number of consecutive errors have been detected, an out-of-sync condition is assumed and the syncing process is repeated. Sustained deep fades or interference can cause the error rate to reach the re-sync threashold.

The FEC mode assumes a continuous data stream. If no signal is present, most, if not all, of the 'received' characters will be errors, and 'spaces' will be displayed. At the end of an FEC broadcast you may switch to a mode other than TOR/FEC to stop the continuous printing of spaces.

If the cursor stops advancing during FEC reception do not attempt to re-tune to restore printing! You <u>are</u> receiving error-free FEC, but non-printing characters are being sent. These may be 'blanks' or phasing signals.

Remember: An error will always print a space, advancing the cursor in the FEC mode.

TOR Notes:

ARQ:

-- Stations sometimes switch from IRS to ISS and back again frequently.

-- You cannot print text from an IRS.

-- ISS stations have been observed sending nothing but phasing or idle signals indefinitely. These will not print.

-- When tuning, make adjustments gradually, and observe the tuning indicators during the bursts. It is much easier to tune an ISS than an IRS.

For additional details on the operation of SITOR you may refer to the following:

(1) Sales Brochure STB750 Mark II North American Philips Corp. - 31 McKee Dr., Mahwah, NJ 07430

(2) Various Publications, International Telecommunication Union - Geneva 20 Switzerland.

(3) RCA Global Communications Marine Services 60 Broad St., New York 10004

Please note that this system is used to minimize errors in code transmission and cannot eliminate all errors.

RECEPTION OF SITOR (TOR)

SITOR (ARQ) transmissions have a unique sound and once one is tuned in you will be able to recognize them immediately.

To set up the M-600 for SITOR perform the following:

Set-up receiver for RTTY reception on (17207.5$\pm$ 0 or 13081.5$\pm$ KHZ) (WCC SITOR), Narrow selectivity.

Punch "D" on keypad and observe status line on screen.

If the status line says TOR FEC then punch "D" again for TOR ARQ indication.

Carefully tune receiver so that both Mark and Space LED's are flashing in time with the signal, the bargraph has maximum deflection to right and the "signal" LED is flashing in sync with data burst.

After a few seconds the M-600 should sync on to the signal and start printing _ _ _ IF actual data is being transmitted.

To receive the FEC toggle the "D" key until TOR-FEC appears on the status line.

Synchronizing in the FEC mode will take longer than in the ARQ mode and should sync be lost due to hits or fading it will automatically re-sync but will be subject to possible delay.

Some TOR-ARQ and FEC stations are located on the following frequencies:

6501.5 KC WLO	17203.0 KC USCG
8708.0 KC WLO	17207.5 KC WCC
13083.5 KC WLO	22571.5 KC WCC
17199.5 KC WLO	17203.5 KC KPH
13077.0 KC USCG	13077.5 KC KPH

Other TOR signals may be found in the following marine bands:

4063.0 - 4438.0 KHZ	12,330.0 - 13200.0 KHZ
6200.00 - 6525.0 KHZ	16,460.0 - 17360.0 KHZ
8195.0 - 8815.0 KHZ	22,000.0 - 22720.0 KHZ

Miscellaneous Notes

Use of JU-1

JU-1, when not used will cause the loop driver circuit to open up when no turn-on signal is being sent to the auto-start system.

This will cause your printer to "run open" for a very short time after loss of signal. However, since the auto-start system will be turned off the power to the printer and thus the ability to run open will cease.

The purpose of this circuit is to limit heat build-up in the unit when the internal loop supply is used.

To disable this circuit JU-1 should be used.

Use of the Cursor Jumper (H-I)

A cursor is a small bar of light on the video screen that indicates where the next character will be shown.

Jumper "H-I", when open, eliminates the cursor.

The use of this jumper is at the users discretion.

ANTENNA SELECTION

Not enough can be said for the antenna at your installation. A great receiver with a poor antenna is next to useless. There are many publications about, and suppliers of, good antennas and we defer to other sources for their recommendation for your specific use. However - we strongly recommend that your antenna be located at some distance from your receiving set-up and that your antenna be fed with a good grade of coax (RG58/U).

Note: The Buffer LED will normally be lit when the buffer is full and no printer is attached.

To keep this LED from illuminating when no printer is attached, short J-8 Ring to ground.

Note: The high baud demodulator tuning LED may be lit when other modes of operation are being used. This is normal.

When using the Mark-only or space-only feature the ATC switch must be "on".

Note: D114 & D122 (Zener diodes) are used to limit the visible tuning range of the mark & space LED's. They may be 1N750A's (4.7v) or 1N4730A's (3.9v). The 3.9v Zener will yield a slightly broader tuning range.

Fig. 7 - Programming your Sel-Cals

Sel-Cals can be programmed in your M-600 at the time of order from the factory, or a 2732 ROM, with your sel-cal programmed in it, can be ordered from the factory.

You must supply a turn on code and turn off code for the sel-cals. Each sel-cal uses up to 8 characters for a turn on and up to 8 characters for a turn off.

These characters can be any of the following:

Any letter A thru Z

Any number Ø thru 9

Space

Any of the following punctuation marks: period, comma, fraction bar, question mark, exclamation point, quote, #, $, %, &, ', (,), *, plus, minus, ;.

To order the sel-cal programmed 2732, fill in the card as shown below and mail with a check for $23.00 to Digital Electronic Systems, 1633 Wisteria Court, Englewood, Fl 33533.

Sel Cal Order

Name _____

Address _____

_____

	ON	OFF
Sel-Cal 1	_ _ _ _ _ _ _ _	_ _ _ _
Sel-Cal 2	_ _ _ _ _ _ _ _	_ _ _ _
Sel-Cal 3	_ _ _ _ _ _ _ _	N N N N

M-600 ALIGNMENT PROCEDURE

Morse Demodulator

Test equipment required:

Accurate frequency counter
DC Scope

1) Remove 796 (IC6) from its socket.
2) Using 8 ball PC clips, jumper pin 6 of 796 socket to pin 7 of 1458 (IC47).
3) Measure the frequency at pin 7 of 1458 (IC47) and note.
4) Attach your counter to pin 3 of 555 (IC45) and adjust R-57 for the frequency noted in step 3 - 1000hz.
5) Attach your counter to pin 5 of IC46 (567) and adjust R98 to the frequency noted in step 3.
6) Replace 567.
7) If you would prefer a different beat note to be used (ie 800hz) then substitute that frequency for the 1000hz in step 4.

High Baud Demodulator

The High Baud rate demodulator is set at the factory for a maximum baud rate of 1200 baud and a center frequency of 1700hz.

R-69 sets the center frequency of this detector and that frequency can be read at pin 3 of IC-7 with R-71 removed from the circuit.

After alignment R-71 should be placed back in the circuit.

Low Baud Demodulator Alignment

1) Inject a 2125hz. signal at the audio input. Attach a scope at J2-7. Adjust R-22 for maximum.
2) Inject a 2295hz. signal at the audio input. Select 170hz shift. Attach a scope at J1-3. Adjust R-17 for maximum.
3) Inject a 2550hz signal at the audio input. Select 425hz shift. Attach a scope at J1-3. Adjust R-12 for maximum.

4) Inject a 2975hz signal at the audio input. Select 850hz shift. Attach a scope at J1-3. Adjust R-7 for maximum.

5) Inject a 2550 signal at the audio input. Select "VAR" shift. Attach a scope at J1-3, adjust R-7 for maximum with "VAR" control (R-127). Set at mid range. R-140 may be used to adjust the range covered by the "VAR" control.

Bar Graph LED Set

R-117 is used to set the sensitivity of the Bar Graph LED.

Practically it should be set so that the bar graph is on its last step when receiving a fully limited signal as indicated by the "LIM" LED.

Diagnostic Oscillators

Morse Diagnostic OSC Alignment

Using a short clip lead ground pin 1 of IC-29. This turns the Morse oscillator on.

Adjust R-152 for maximum reading on the front panel bar graph display.

Remove the short.

RTTY Diagnostic OSC

Place the demodulator in Mark only mode (MO switch). Set the M-600 up for RTTY, 100 Baud, 170 shift. Turn on the diagnostic routine.

Adjust R-155 for maximum reading on the front panel bar graph.

Video Fonts (Character Sets)

		Normal	Weather
A.	Numerals 1 through Ø	1-Ø	1-Ø
B.	Alphabet A through Z (upper case only)	A-Z	A-Z
C.	Ampersand	@	
D.	Space	space	space
	period	.	•
	comma	,	ⓓ
	fraction bar	/	/
	reverse fraction bar	\	
	left bracket	[	
	right bracket	]	
	up arrow	^	
	exclamation point	!	→
	quotation mark	"	+
	pound	#	↓
	dollar	$	↗
	percent	%	
	apostrophe	'	
	left parens	(	←
	right parens	)	↖
	star	*	
	plus	+	
	minus	-	
	colon	:	O
	semi-colon	;	ⓓ
	equal	=	
	left pointing arrow	<	
	right pointing arrow	>	
	dash	_	
	and	&	↑ ↘
	question mark	?	⊕
	upper case blank		—

For interpretation of the special weather symbols refer to various publications by the weather bureau.

LIMITED WARRANTY

Digital Electronic Systems, Inc. (herein after referred to as 'manufacturer') has tested and found each product to function properly, and within the specifications listed in the product's manual, before being shipped. Any of Manufacturer's product found defective in either workmanship or materials, within a period of six months from the date of purchase by the original owner, will be, at the option of the Manufacturer, repaired, replaced, or adjusted at no charge, to the original quality standard, if returned to the factory prepaid, provided that the warranty card supplied with the product is completed and returned to the Manufacturer within 30 days from the date the system was purchased. If no warranty card is on file from the purchaser, then the warranty term, on that particular unit will terminate 7 months after the date of shipment from the factory.

This warranty term does not apply to Semiconductors which are warranted for 90 days. This warranty does not cover products damaged through abuse, operation outside of limits specified in the operating manual, or modifications to the product made without permission from the manufacturer.

All transportation charges on returned systems, whenever warranty does NOT apply, must be borne by the owner to and from the manufacturer.

If service or repair becomes necessary following expiration of the warranty period, or whenever warranty does not apply due to the conditions stated above, write the Manufacturer, giving model and serial number and details of your problem, to obtain a returned material authorization.

Upon receipt of the R.M.A. you may carefully pack and ship the unit to the manufacturer, prepaid, preferably via UPS.

Should you desire, the Manufacturer will give you a guaranteed cost for the repair of your unit prior to repair otherwise the unit will be repaired and returned to you at the prevailing rates for parts and labor.

Upon receipt of equipment, the purchaser is responsible for checking the contents for damage. Any shipping damage should be referred to the carrier. Manufacturer is not responsible for any personal injury or property, or consequential damage resulting from improper or careless installation or for usage not intended by the manufacturer.

Digital Electronic Systems, Inc. reserves the right to change designs and specifications without notice.

PARTS LIST M-600

Capacitors

C-3,4,5,6,7,8,9,10,11,12,13,14, 15,47,48	.01 mfd mylar 5%
C-16,17	15 mfd Lo leakage electrolytic
C-18,39,30,32,35,C-53,C117,C120	.01 mylar
C-31	.022 mylar
C-33	.0027 mylar
C-34,41,45,44,50,49,52,121,116, 116A + various un-named by-passes.	.1 disc
C-43	4.7 mfd elec.
C-38,113,118,119	.01 disc
C-51	.22 mylar
C-105	3300 mfd elec
C-106,107	1000 mfd elec
C-102	.1 disc
C-101	1 mfd
C-109,114	22 mfd elec
C-108	220 pfd
C-110,111 when used	15 pf

Variable Resistors

R-7,12,17,22	1000 ohm multiturn pot
R-127	100 ohm panel mount pot
R-128	2500 ohm panel mount pot
R-69,98	5000 ohm multiturn pot
R-57	10K ohm multiturn pot
R-117,52	500K ohm single turn pot
R152,155	10K ohm single turn pot

Fixed Resistors

R-1,3,5,13,15,44	150K, 1%
R-2	150 ohm
R-4,14	158K, 1%
R-6,16	309K, 1%
R-8,10,45	127K, 1%
R-9,30,31	130K
R-11	261K, 1%
R-18,20,43	174K, 1%
R-19	178K, 1%
R-21	348K, 1%
R-23,25,42	187K, 1%
R-24	191K, 1%
R-26	374K, 1%
R-27,R-28	10Kx5 sip packs
R-32,35,36,141,123, 69,130,102,103,104, 88,47,54,60,62,63, ,87,89,90,95, 107,12K,160,137, 141,121	12K
R-33,34,109,110,39, 65,72	100K
R-37,153	68K
R-53	1.8 meg
R-70	27K
R-38,41,50, ,94	22K
R-46, ,67,96	470K
R48,51	4.7K
R-55,116,118,138	1 meg
R-56	2K
R-59	2.7K
R-61	5.6K
R-64,58,143,131,99,142	820 ohm
R-68,78,135,133,100,101 105,108	470 ohm
R-29,71,156	33K
R-73	510K
R-74,80,86,129,124	1K
R-75,76,91	3.9K
R-77	100
R-79,81,84, 66	51
R-82,83,125,150,157	47K
R-85	6.8K
R-93	1.5K
R-97	10K
R-106,122	330
R-126	33K, ½W
R151,154	1,2K
R-40	220K
R-115	680K

PARTS LIST M-600

Semiconductors

IC-1,2,3,4,5,8,9	MC4741, TL084
IC-6	MC1496P
IC-7	XR-2211
IC-10,11,12	74LS157
IC-13	74LS645
IC-14	2016
IC-15	74LS174
IC-16	74LS166
IC-17	2716
IC-18	4042B
IC-19,21,28,39	4011B
IC-20,25	4001B
IC-22	7404
IC-23	74LS93
IC-24,26	7400
IC-27	MC6845 or HD46505
IC-29	4023B
IC-31,32	4051B
IC-33	I-201
IC-34	2732
IC-35	74LS42
IC-36	3871
IC-37	3850
IC-38	3853
IC-43,44,45	555
IC-46	567
IC-47	1458
IC-50	4N28
VR-1	LM309K
VR-2	7812UC
VR-3	7912UC
Q-1,5,6,8,9,11,12	MPS5172
Q-2,3	MPSA42
Q-4,10	VN10K
IC-49	74LS02

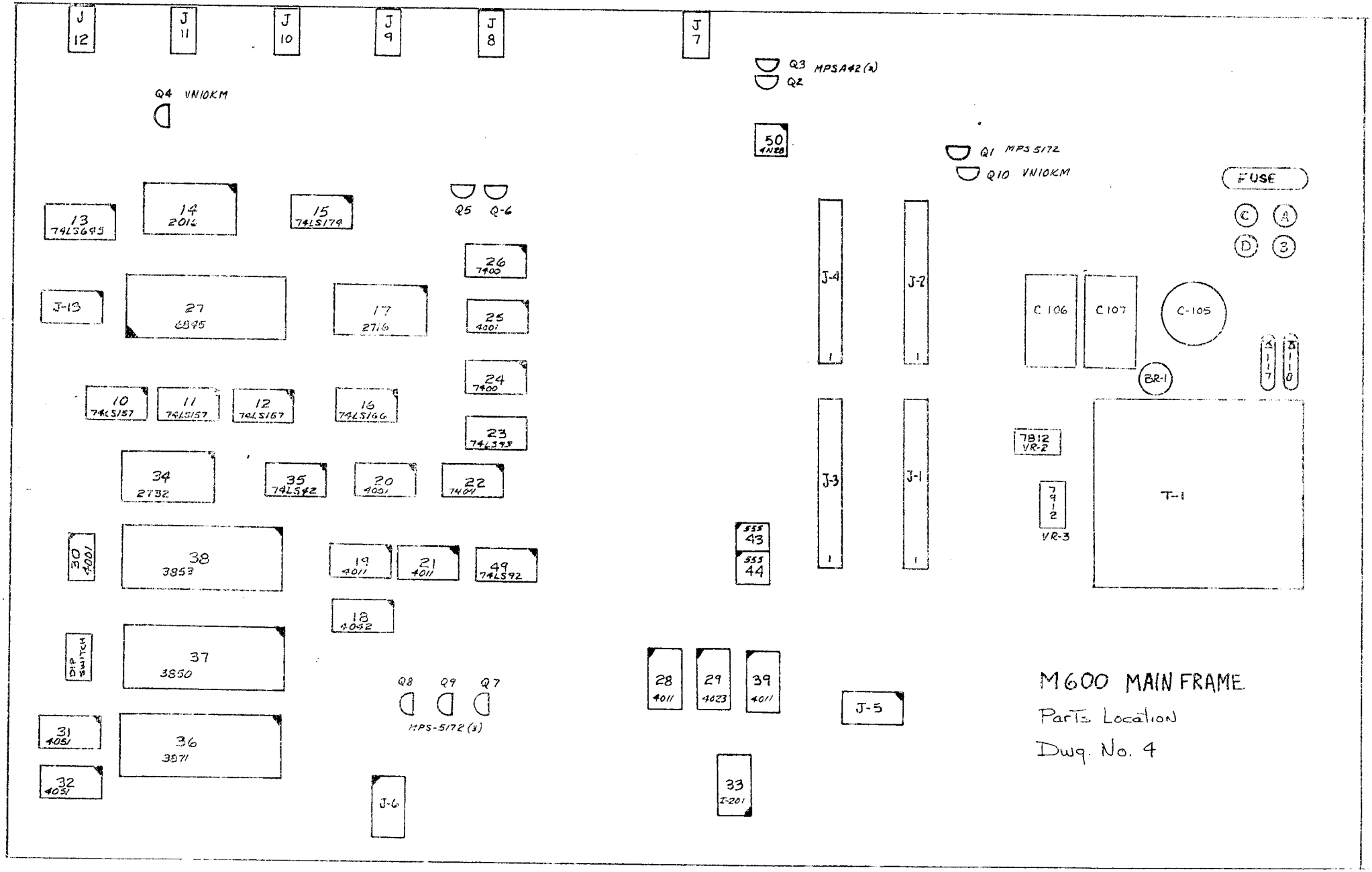
J 12
J 11
J 10
J 9
J 8
J 7
Q4 VN10KM
Q3 MPSA42(2)
Q2
50 4N28
Q1 MPS5172
Q10 VN10KM
FUSE
C
A
D
B
13 74LS695
14 2016
15 74LS179
Q5 Q6
26 7400
J-13
27 6895
17 2716
25 4001
24 7400
10 74LS157
11 74LS157
12 74LS157
16 74LS166
23 74LS393
34 2732
35 74LS42
20 4001
22 7401
30 4001
38 3853
19 4011
21 4011
49 74LS92
18 8042
DIP SWITCH
37 3850
Q8 Q9 Q7
MPS-5172(3)
31 4051
36 3871
32 4051
J-6
28 4011
29 4023
39 4011
J-5
33 I-201
555 43
555 44
J-4
J-2
J-3
J-1
C 106
C 107
C-105
BR-1
A 117
B 110
7812 VR-2
7912 VR-3
T-1
M600 MAIN FRAME
Parts Location
Dwg. No. 4

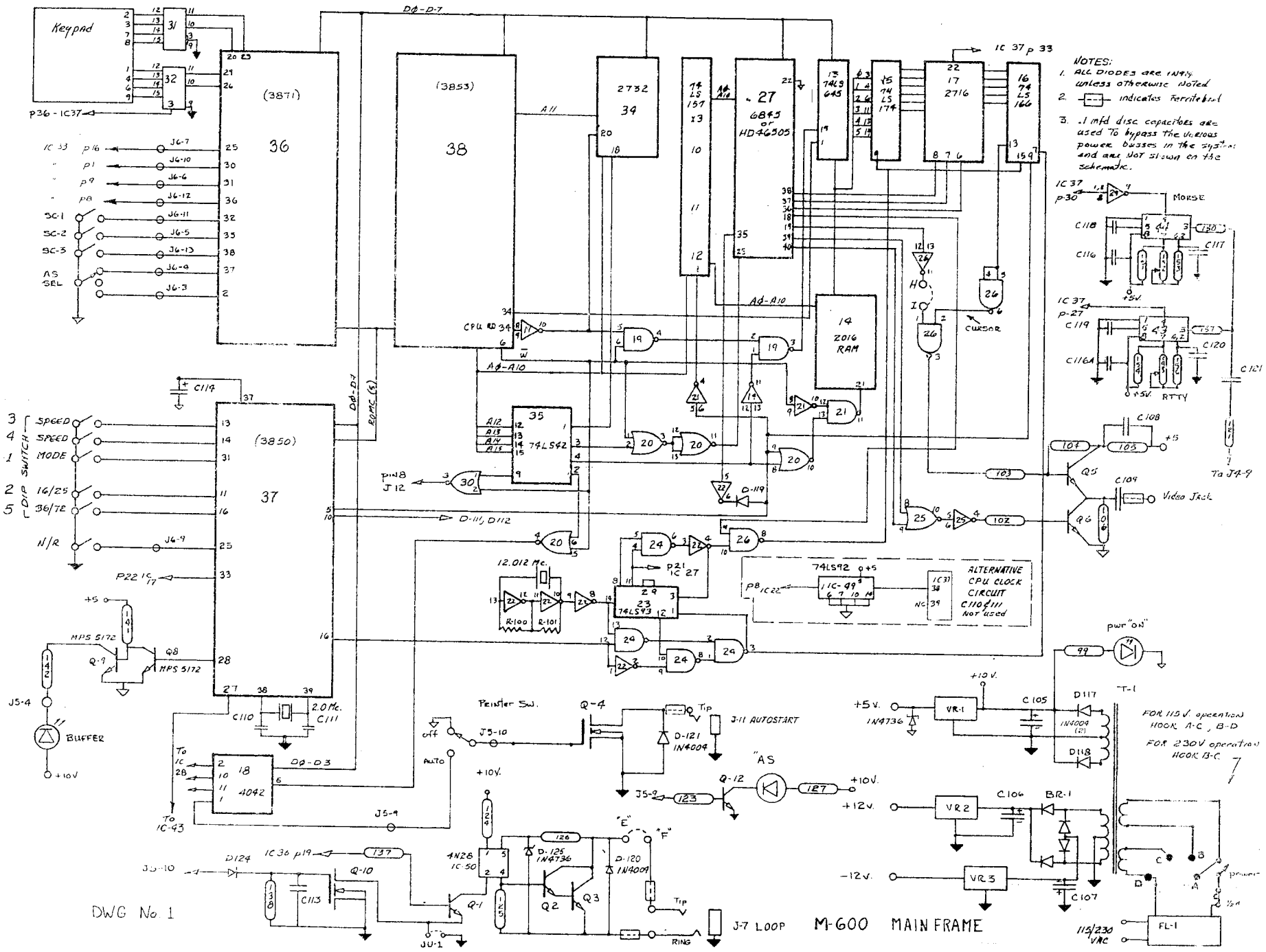

NOTES:
1. ALL DIODES ARE IN914 unless otherwise noted
2. indicates Ferrite bead
3. .1 mfd disc capacitors are used to bypass the various power busses in the system and are not shown on the schematic.

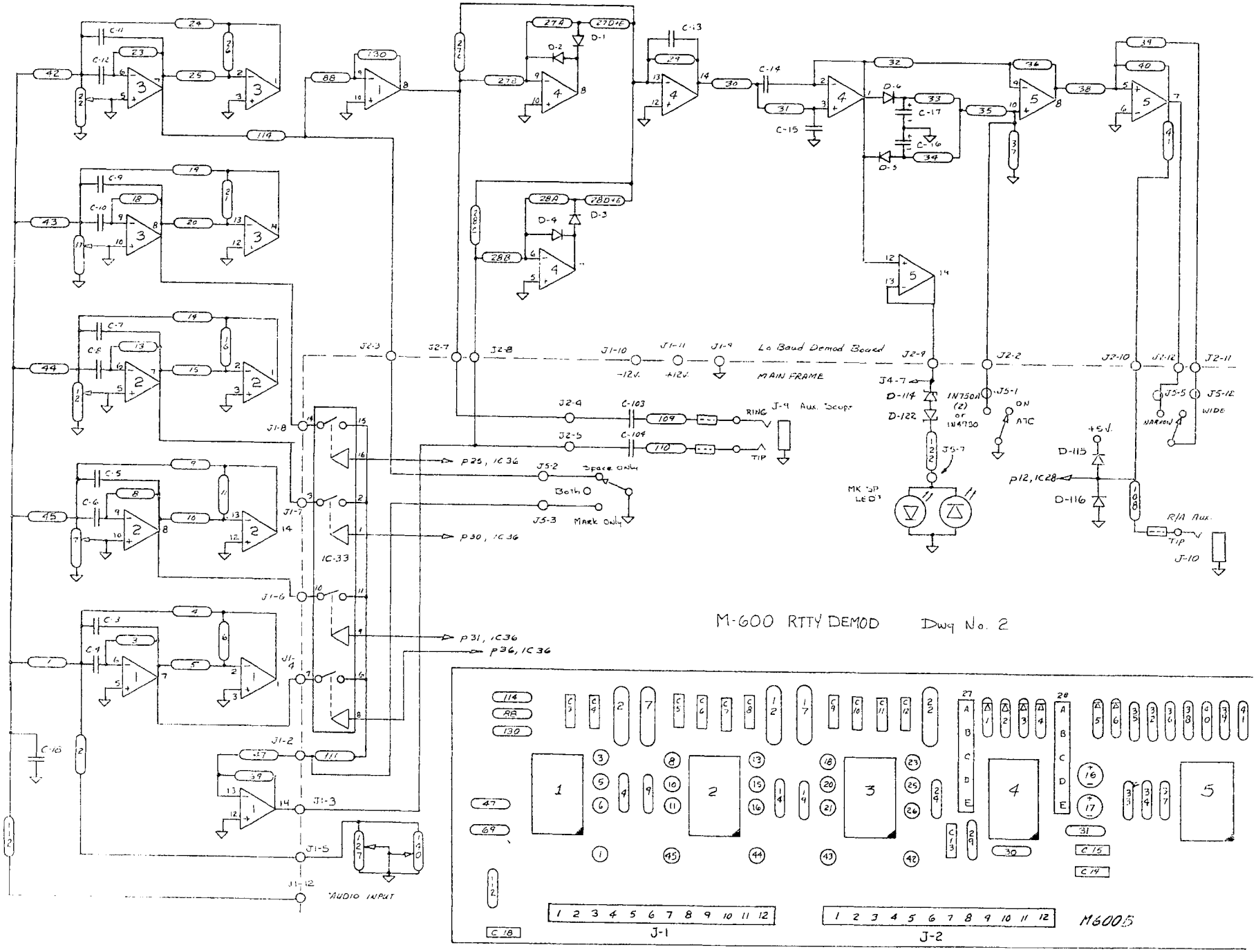
M-600 RTTY DEMOD Dwg No. 2
Lo Baud Demod Board
MAIN FRAME
-12V.
+12V.
RING
TIP
Space Only
Both
Mark Only
AUDIO INPUT
IC-33
MK 3P LED
IN750A (2) or IN4730
ON
ATC
WIDE
NARROW
R/A Aux.
M6005
J-1
J-2

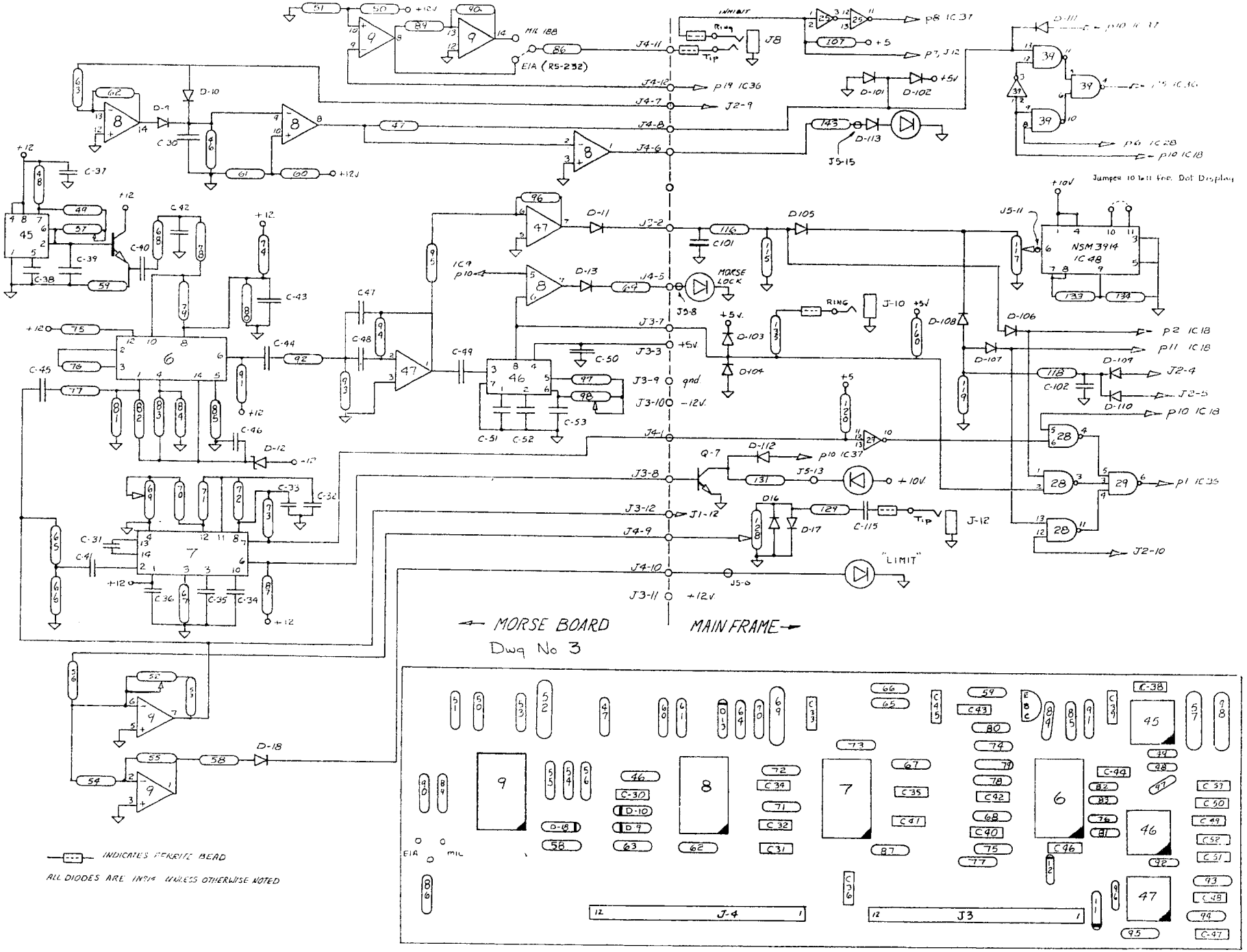

MIL 188
EIA (RS-232)
INHIBIT
Ring
Tip
J8
p8 IC 37
p7, J12
p19 IC36
J2-9
J4-11
J4-12
J4-7
J4-8
J4-6
J5-15
D-101
D-102
D-113
p6 IC 28
p10 IC 18
Jumper 10 to 11 for Dot Display
NSM 3914
IC 48
J5-11
D105
D-11
J3-2
C101
MORSE LOCK
J5-8
J4-5
D-13
IC9
p10
RING
J-10
+5V
D-103
D-104
D-108
D-106
D-107
p2 IC 18
p11 IC 18
D-109
J2-4
C-102
D-110
J2-5
p10 IC 18
J3-7
J3-3
J3-9
J3-10
gnd
-12V
J4-1
Q-7
D-112
p10 IC37
J5-13
+10V
J3-8
J3-12
J1-12
D16
D-17
C-115
J-12
p1 IC 35
J2-10
J4-9
J4-10
J5-6
"LIMIT"
J3-11
+12V
MORSE BOARD
Dwg No 3
MAIN FRAME
INDICATES FERRITE BEAD
ALL DIODES ARE 1N914 UNLESS OTHERWISE NOTED
J-4
J3