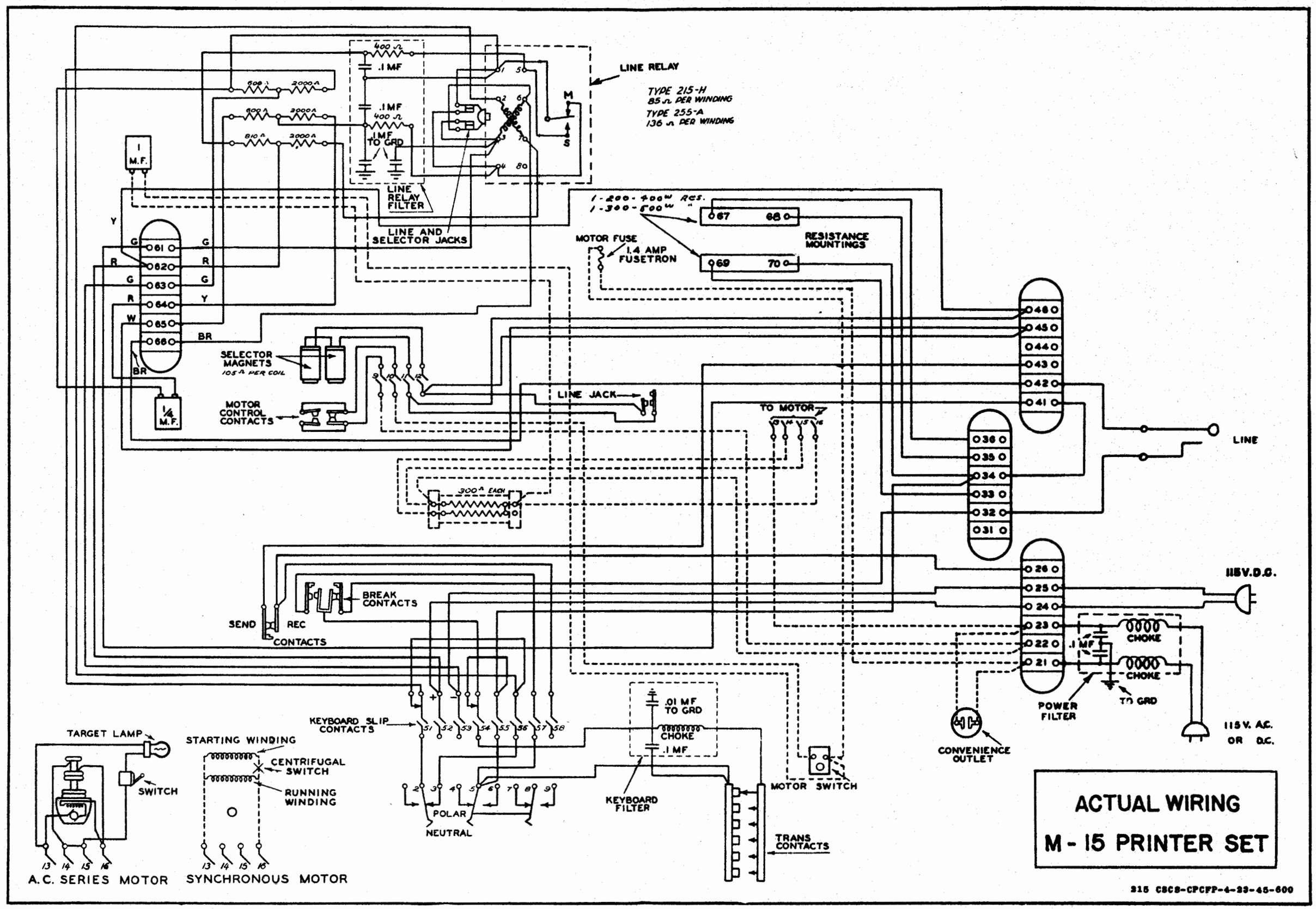
LINE RELAY
TYPE 215-H
85 Ω PER WINDING
TYPE 255-A
136 Ω PER WINDING
LINE RELAY FILTER
LINE AND SELECTOR JACKS
1 M.F.
1/4 M.F.
1-200-400W RES.
1-300-500W "
RESISTANCE MOUNTINGS
MOTOR FUSE
1.4 AMP FUSETRON
SELECTOR MAGNETS
105 Ω PER COIL
MOTOR CONTROL CONTACTS
LINE JACK
TO MOTOR
300Ω EACH
LINE
115V.D.C.
BREAK CONTACTS
SEND
REC
CONTACTS
CHOKE
.1 MF
POWER FILTER
TO GRD
115 V. A.C. OR D.C.
CONVENIENCE OUTLET
KEYBOARD SLIP CONTACTS
.01 MF TO GRD
KEYBOARD FILTER
MOTOR SWITCH
TRANS CONTACTS
POLAR
NEUTRAL
TARGET LAMP
SWITCH
STARTING WINDING
CENTRIFUGAL SWITCH
RUNNING WINDING
A.C. SERIES MOTOR
SYNCHRONOUS MOTOR
ACTUAL WIRING
M-15 PRINTER SET
215 CSCS-CPCFP-4-23-45-600