## DESCRIPTIVE DATA

### (A) IDENTIFICATION

MANUFACTURER WESTINGHOUSE ELEC. & MFG. CO.
MANUFACTURER'S TYPE *FK* CLASS *A* FRAME NO. *D186*
NAVY CONTRACT OR SHIPBUILDER'S ORDER *SEE TITLE BLOCK* DATE
INSTALLED ON (SEE TITLE BLOCK FOR VESSELS INVOLVED)
FOR DRIVING — *CAY 21864 GENERATOR*
MANUFACTURER OF DRIVEN AUXILIARY *WESTINGHOUSE ELECTRIC & MFG. CO.*
REFERENCE SPECIFICATIONS
THE MOTORS DESCRIBED HEREUNDER WILL CONFORM STRICTLY WITH NAVY DEPARTMENT SPECIFICATION 17M17 INT. (MOTORS D.C. FOR SHIPBOARD USE) OF SEPT. 1, 1940 AND OF THE SPECIFICATIONS FOR THE VESSEL. EXCEPT AS SPECIFICALLY ENUMERATED BELOW.
REFERENCE DRAWINGS

| TITLE OF DWG. | MANUFACTURER'S NO. | BU. SHIPS NO. |
|---|---|---|
| | | |

### (B) MANUFACTURER'S DESCRIPTIVE DATA

MOTOR CLASSIFICATION
DEGREE OF ENCLOSURE *SEMI-ENCLOSED* SERVICE-NAVY *"A"*
METHOD OF COOLING *NATURAL VENTILATED*
SPEED CLASS - *CONSTANT* DUTY CLASSIFICATION - *CONTINUOUS.*
VOLTAGE * *115* R.P.M. * *3450* H.P. * *1*
TYPE OF WINDING *COMPOUND.* AMPERES * *11.6*
AMBIENT TEMP. *40* °C. CLASS OF INSULATION *A*
TEMPERATURE RISE, TABLE METHOD 1 & 2 CONCURRENTLY
MOUNTING (HORIZONTAL OR VERTICAL) — *HORIZONTAL.*
DATA MARKED * TO APPEAR ON NAME PLATE.

| PERFORMANCE | | EFFICIENCY | AMPERES (115 V.) |
|---|---|---|---|
| (A) GUARANTEED | 4/4 | 71% | 11.6 |
| (B) GUARANTEED | 3/4 | 66% | 9.35 |
| (C) GUARANTEED | 1/2 | 56% | 7.36 |
| (D) | 1/4 | | |

SPECIAL ATTACHMENTS: *NONE*

WEIGHTS
(A) MOTOR COMPLETE *71* LBS. (B) ROTOR COMPLETE — *11 1/2* LBS.
(C) ALL SPARES BOXED, INCLUDING CONTROL SPARES ____ LBS.
SHAFT, BEARINGS & LUBRICATION
(A) SHAFT MATERIAL *COLD DRAWN CARBON STEEL* (B) TYPE OF BEARINGS—BALL
(C) BALL BEARING IDENTIFICATION
NAVY TYPE *A*, CLASS *a* GRADE II MANUFACTURER'S *SAE #204 & #206 SINGLE SEAL.*
(D) TYPE OF LUBRICATION—GREASE NAVY SYMBOL 14-L-3 GRADE *"B"*
(E) BEARINGS SHOWN ARE APPROVED BY BALL BEARING MANUFACTURER AS REQUIRED BY PAR. 7 (c), APPENDIX I OF NAVY SPEC. 42-B-5.
BRG. M'F'G. ____ SIGNED ____
POLES
MAIN (A) NO. *2* (B) AIR GAP NOMINAL *.025 IN SINGLE*
COMM. (C) NO. *0* (D) AIR GAP NOMINAL
ARMATURE
(A) DIAM. *3.365* (B) CORE LENGTH *3 1/4*
COMMUTATOR
(A) DIAM. *2 3/8* (B) LENGTH *1* (C) WEARING DEPTH *1/8 IN ON DIA.*
(D) *1/32* UNDERCUT (E) INSUL: BET. BARS *MICA* TO GROUND *MICA*
BRUSHES: *INPUT*
(A) NO. OF STUDS *2* (B) NO. OF BRUSHES PER STUD *1* GRADE *WL 20*
(C) DIMENSIONS LENGTH *1 1/4* WIDTH *.748* THICKNESS *.248*
(D) GRADE NAVY *B* MANUFACTURER *STACKPOLE CARBON CO.*
*BRUSHES: SLIP RING*
*(A) NO. OF STUDS 2 (B) NO. OF BRUSHES PER STUD 1 GRADE WA10*
*(C) DIMENSIONS: LENGTH 1 1/4 WIDTH .373 THICKNESS .248*
*(D) GRADE: NAVY B MANUFACTURER STACKPOLE CARBON CO.*
CAPACITORS

| PIECE NOS. | NAVY SYMBOL NOS. | MANUFACTURER | MFGR'S DESIGNATION |
|---|---|---|---|
| 85-97-100 | C-603, C-604 | CORNELL DUBILIER | 9AS 11025 |
| 90-98-99 | C-601, C-602 | CORNELL DUBILIER | DYR 6050 |

### (C) TYPE TESTS

TO BE MADE ONLY ON SELECTED MOTORS REFER TO SPECIFICATION 17-M-17
EFFECTIVENESS OF ENCLOSURE *OK.*

| EFFICIENCY | |
|---|---|
| FULL LOAD I²R LOSSES IN WINDINGS | 109.6 |
| BEARING & BRUSH FRICTION AND WINDAGE | 43.4 |
| CORE LOSSES | 101.0 |
| STRAY LOAD LOSSES | |
| CALCULATED EFFICIENCY AT 1/2 LOAD | 62.5% |
| 3/4 LOAD | 68.5% |
| 4/4 LOAD | 72.5% |

| RESISTANCE | ARM. | SH. FLD. | SER. FLD. | COMM. FLD. |
|---|---|---|---|---|
| 24 °C | .274 | 236.8 | .079 | |
| °C | .350 | 280.0 | .0948 | |

SPEED TEST

| | COLD LINE VOLTS | COLD LINE AMPS | COLD SHUNT FLD. VOLTS | COLD SHUNT FLD. AMPS | COLD R.P.M. | HOT LINE VOLTS | HOT LINE AMPS | HOT SHUNT FLD. VOLTS | HOT SHUNT FLD. AMPS | HOT R.P.M. |
|---|---|---|---|---|---|---|---|---|---|---|
| NO LOAD | 115 | 2.1 | | | 3690 | 115 | 2.1 | | | 3750 |
| FULL LOAD | 115 | 11.0 | | | 3360 | 115 | 11.0 | | | 3450 |
| LOAD | | | | | | | | | | |
| NO LOAD | | | | | | | | | | |
| FULL LOAD | | | | | | | | | | |
| LOAD | | | | | | | | | | |

### HEATING

NORMAL LOAD HEAT RUN

| TIME | LINE VOLTS | LINE AMPS | SHUNT FLD VOLTS | SHUNT FLD AMPS | NO 1 | NO 2 | NO 3 | NO 4 | NO 5 | NO 6 | ROOM |
|---|---|---|---|---|---|---|---|---|---|---|---|
| 8:30 | 115 | 11.30 | | | 25 | | 25 | | 26 | | 26 |
| 9:00 | 115 | 11.10 | | | 43 | | 46 | | 41 | | 26 |
| 9:30 | 115 | 11.05 | | | 41 | | 51 | | 54 | | 27 |
| 10:00 | 115 | 11.03 | | | 43 | | 53 | | 56 | | 27 |
| 10:30 | 115 | 11.00 | | | 44 | | 54 | | 57 | | 27 |
| 11:00 | 115 | 11.00 | | | 44 | | 54.5 | | 57 | | 27 |
| 11:30 | 115 | 11.00 | | | 44 | | 54.6 | | 57 | | 27 |
| | | | | | ALL TEMPERATURES ARE BY THERMOMETER | | | | | | |
| TEMP RISE DEGREES C. WHILE RUNNING | | | | | 17 | | 27.5 | | 30 | | 27 |
| TEMP RISE DEGREES C AFTER SHUTDOWN | | | | | 17 | | 29. | | 38 | | 27 |

LOCATION OF THE NUMBER IN THE TABLE (NORMAL LOAD HEAT RUN) ABOVE SHOULD BE INDICATED
NO. 1 *BRG.* NO. 2 ____ NO. 3 *FRAME* NO. 4 ____ NO. 5 *WDG.* NO. 6 ____
SHUTDOWN TEMPERATURES *BY THERMOMETER*
ARMATURE CORE ____ COMMUTATOR ____
ARMATURE WINDING ____ FRONT BRG. *44* REAR HEAD ____
OVERSPEED *4900 TIME-5MIN. REMARKS-NORMAL NOISE & VIBRATION*
DIELECTRIC STRENGTH *1800 VOLTS FOR 1 SECOND.*
INSULATION RESISTANCE *260 MEGOHMS, MOTOR TEMP 50°C; 14000 MEGOHMS, MOTOR TEMP 24°C*
INSPECTOR'S SIGNATURE ____
OFFICE ____ DATE ____

### (D) CONCLUSION

IN VIEW OF THE TEST DATA SHOWN ABOVE AND THE SATISFACTORY HORSEPOWER CAPACITY, SPEED CHARACTERISTICS, POWER FACTORS AND EFFICIENCIES WHEN DRIVING THE CONNECTED AUXILIARY THROUGHOUT ITS RANGE OF SPECIFIED OPERATING CONDITIONS AS REPORTED BY I. N. M. ____ LETTER ____ OF ____ 194__ THE MOTORS ARE CONSIDERED AS MEETING SPECIFICATION AND CONTRACT REQUIREMENTS AND SUITABLE FOR THE PURPOSE INTENDED EXCEPT ____

INSPECTOR'S SIGNATURE ____
OFFICE ____ DATE ____

## NOTES

#1 NAVY DEPARTMENT MATERIAL SPECIFICATION OF ISSUE IN EFFECT SEPT. 1, 1940 ARE APPLICABLE (17M17 INT.)
#2 #10 THREADS (.190 DIA, 32 THDS PER INCH) TO BE IN ACCORDANCE WITH NATIONAL FINE THREAD SERIES PER 17M17 INT PAR. C-5b(2). ALL OTHER THDS. TO BE IN ACCORDANCE WITH NATIONAL COARSE THD. SERIES PER 17M17 INT PAR. C-5b(1), UNLESS OTHERWISE SPECIFIED.
#3 CADMIUM PLATING TO BE IN ACCORDANCE WITH NAVY DEPT. SPEC. 46P1.
#4 ALL METAL SURFACES INSIDE OF MOTOR PROTECTED WITH A COAT OF ZINC CHROMATE PRIMER. (WESTINGHOUSE #212-T) (NAVY AERO. SPEC. P27-b).
#5 THIS MATERIAL IS EQUIVALENT TO, OR BETTER THAN THE COMMERCIAL GRADE KNOWN AS "SILICON STEEL ELECTRICAL GRADE."
#6 A MIXTURE OF SHELLAC AND GUMS IN ALCOHOL WITH A PLASTICIZER AND LOADED WITH RED IRON OXIDE (WESTINGHOUSE #672-1.)
#7 A MOLDED FIBRE TUBE. (WESTINGHOUSE #5857-2)
#8 A COMPOSITION OF SYNTHETIC RESIN, ASBESTOS AND PIGMENTS.
#9 THIS CUP WILL MEET NAVY SPEC. 45C7, TYPE D, EXCEPT CUP WILL BE MADE OF STEEL AND CADMIUM PLATED PER NAVY SPEC. 46P1, IN LINE WITH CHIEF OF BU. SHIPS LETTER S63-1(3660) EN. 28/A2-11 DATED 2-7-42. THIS CUP IS CATALOGUE STYLE #GN-7403 SIZE 000, AMERICAN STAMPING CO., BATTLE CREEK, MICH.
#10 THIS MATERIAL IS WRIGHT ANNEALED, HALF HARD, COLD ROLLED CARBON STEEL (S.A.E. 1010) AND IS ZINC PLATED TO MEET (NAVY SPEC. 46P2) OF ISSUE APRIL 1, 1938.

### ARMATURE WINDING & INSULATION DATA

ARMATURE CORE HAS 16 SLOTS. COMMUTATOR HAS 48 BARS. ARMATURE IS WOUND WITH 4-4-5 TURNS PER COIL OF .051 DIA. (#16) PAPER COVERED ENAMEL COPPER WIRE. ARMATURE HAS 26 WIRES PER SLOT.

ENDS OF FIRST COIL LIE IN BARS #24 & #25. FIRST COIL LIES IN SLOTS #1 & #8. WIRES ARE CONNECTED TO BARS #1 & #25 AND TAKEN THRU THE ARMATURE SLOTS TO THE SLIP RINGS. WINDING IS PROGRESSIVE.

COILS ARE RETAINED IN SLOTS BY 1/16 TK HARD FIBRE WEDGE.

CROSS SECTION OF COILS SHOWS METHOD OF INSULATING WIRES IN SLOTS.

COMPLETE WOUND ARMATURE IS TREATED 3 TIMES IN WESTINGHOUSE VARNISH #7669 WITH BAKING 12 HOURS AT 120°C AFTER EACH TREATMENT.

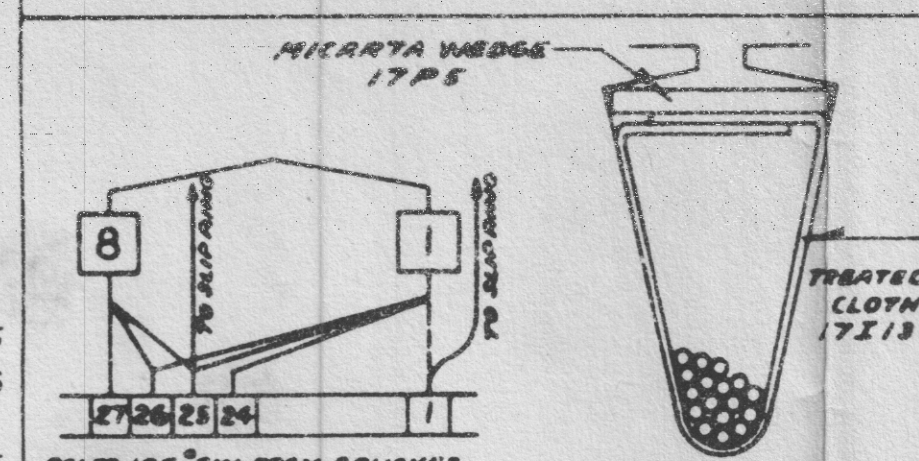


ARMATURE CONNECTIONS — ENLARGED VIEW OF ARMATURE SLOT

### FIELD COIL WINDING & INSULATION DATA

EACH SHUNT COIL CONSISTS OF 2300 TURNS OF .0159 DIA. (#26) ENAMELED COPPER WIRE WOUND ON A MOULD 3 1/2 IN LONG BY 2 IN WIDE AND 1/8 IN RADIUS, BY 1/2 IN THICK. SHUNT COIL IS INSULATED FROM SERIES COIL WITH 2 LAYERS OF .010 TK. TREATED CLOTH PLACED OVER THE COIL AND ON THE SIDES AND HELD IN PLACE WITH SCOTCH FLAT BACK TAPE.

EACH SERIES COIL CONSISTS OF 12 TURNS OF TWO .057 DIA. (#15) ENAMELED COPPER WIRES IN PARALLEL WOUND OVER THE SHUNT COIL. THE COIL IS TIED AT THE CORNERS. LEADS ARE ATTACHED AND BOUND TIGHTLY TO COIL, APPROXIMATELY ONE TURN OF 15 OF .005 CABLE BEING USED BETWEEN LEADS AND WIRE OF SHUNT WINDING TO PROTECT THE WINDING. LEAD JOINTS ARE SOLDERED AND INSULATED WITH A CELLULOSE ACETATE BUSHING. LEAD CROSSOVERS AND CONNECTIONS ARE INSULATED WITH A CELL OF .015 TK. RAG PAPER. COILS ARE BENT TO SHAPE AND THEN DIPPED IN WESTINGHOUSE VARNISH #6109 AND BAKED 14 HOURS AT 120°C.

COILS ARE THEN TAPED OVER ALL WITH ONE LAYER OF .010 TK. TREATED CLOTH TAPE HALF OVERLAPPED, FOLLOWED BY ONE LAYER OF .007 TK. COTTON TAPE HALF OVERLAPPED. COILS ARE THEN GIVEN 3 SEALING COATS OF WESTINGHOUSE VARNISH #6109. EACH COAT IS APPLIED BY DIPPING COILS FOR ONE MINUTE AND BAKING 8 HOURS AT 120°C. LEADS ARE 41 OF .010 RUBBER AND COTTON INSULATED CABLE.

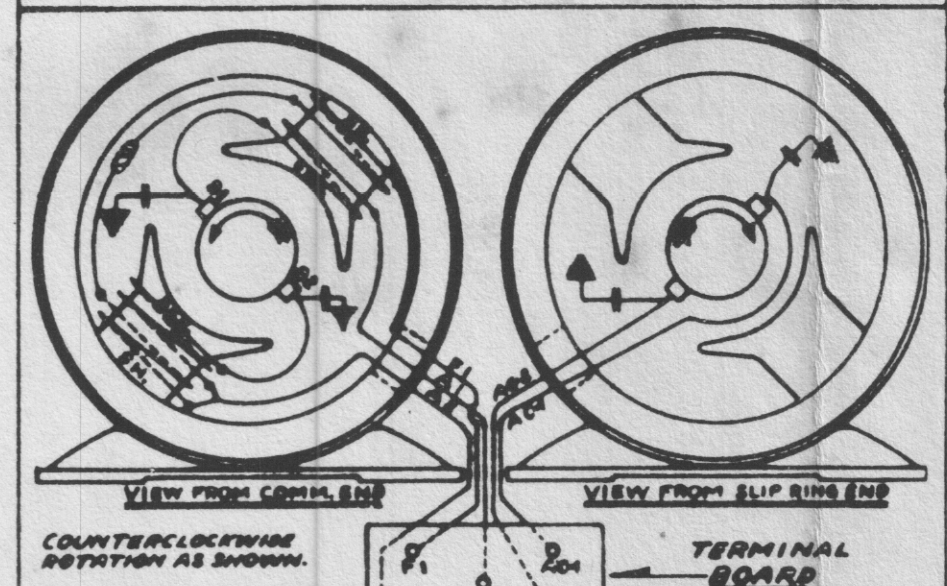


D.C. CONNECTIONS — INPUT: — CONNECT A2 TO ONE LINE WIRE AND A1 & F1 TO THE OTHER LINE WIRE.
A.C. CONNECTIONS — OUTPUT: — CONNECT AC1 TO ONE LINE WIRE AND AC2 TO THE OTHER LINE WIRE.

ROTATION AND CONNECTION DIAGRAM

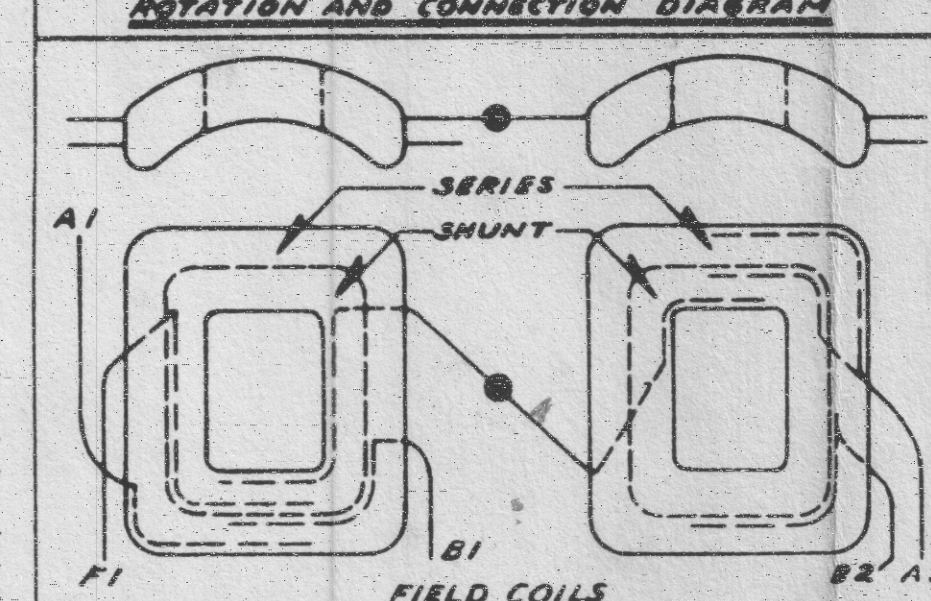


FIELD COILS

### EXCEPTIONS TO NAVY SPEC. 17M17

#1 E-3a THE FRAME RING IS MADE OF SEMI-STEEL INSTEAD OF STEEL.
#2 C-7a(6) PREHEATING OF FIELD COILS AND ARMATURE BEFORE VARNISH DIPPING IS OMITTED.
#3 WESTINGHOUSE #6109 & #7669 VARNISH HEAT ENDURANCE TEST IS 250 HOURS. (GRADE BB VARNISH NAVY SPEC. 52V13 REQUIRES 500 HOURS.)
#4 E-12c BRUSH HOLDERS ARE CARTRIDGE TYPE, NOT ADJUSTABLE.
#5 E-8c COMMUTATOR IS SECURED TO SHAFT BY PRESS FIT.
#6 E-8d WEARING DEPTH IS 1/8 IN. ON DIAMETER.
#7 E-6b BEARINGS ARE SINGLE SEALED WITH NO SUPPLEMENTARY HOUSING SHIELD. A ROTATING OIL FLINGER IS ASSEMBLED ON THE SHAFT, ADJACENT TO THE BEARING.
#8 E-7b ARMATURE LAMINATIONS ARE NOT CLAMPED.
#9
#10 CREEPAGE DISTANCE TO GROUND — 1/8 IN.
DISTANCE THRU AIR TO GROUND — 1/8 IN.
CREEPAGE DISTANCE TO OPPOSITE POLARITY — 1/8 IN.
DISTANCE THRU AIR TO OPPOSITE POLARITY — 1/8 IN.
#11 INPUT BRUSHES ARE GRADE WL-20 MANUFACTURED BY STACKPOLE CARBON CO.
#12 SLIP RING BRUSHES ARE GRADE WA-10 MANUFACTURED BY STACKPOLE CARBON CO.

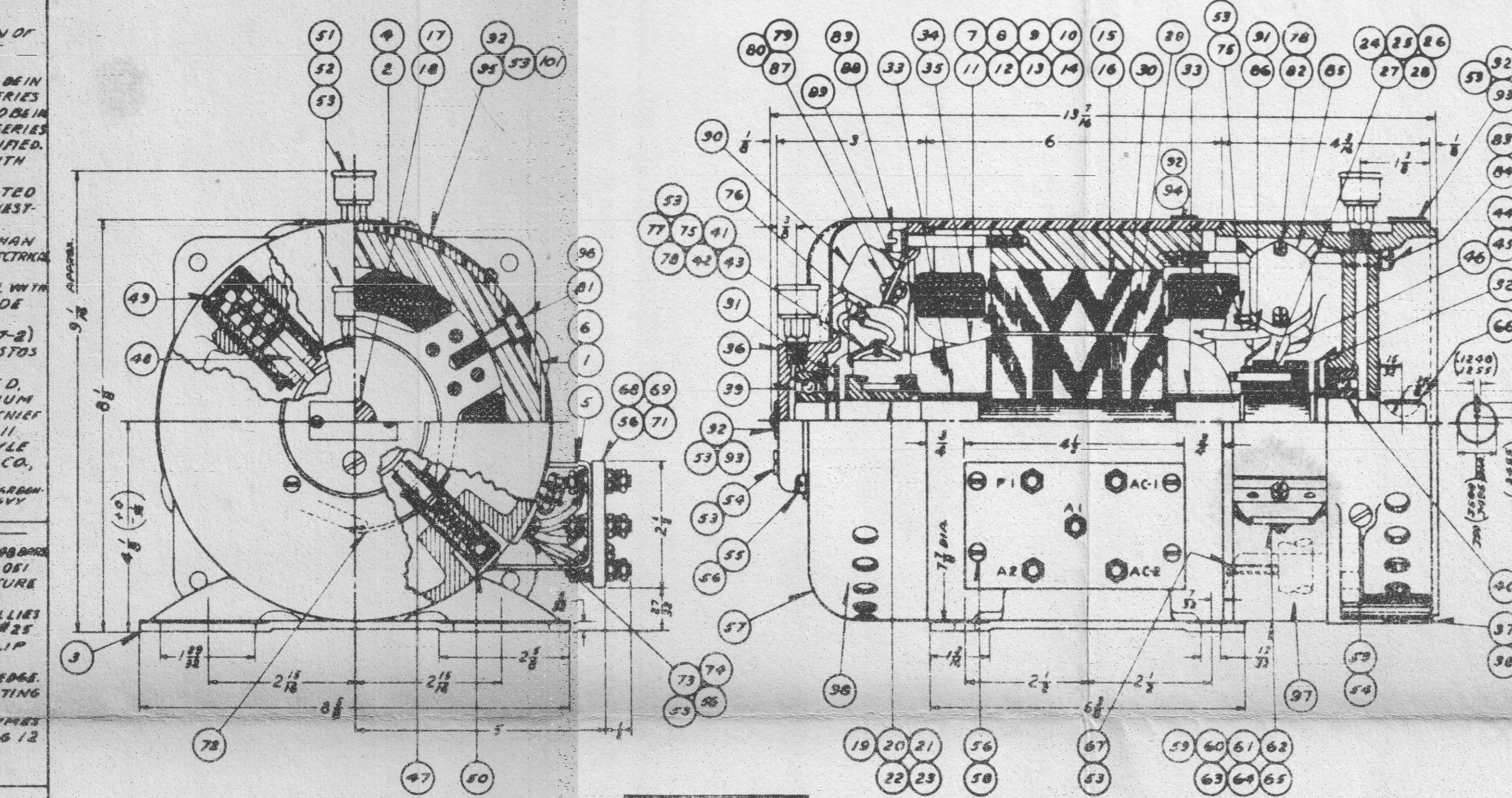

NOT TO SCALE

FOR COUPLING DATA SEE DWG # 36-J-145

## LIST OF MATERIAL

QUANTITIES ARE FOR ONE MACHINE

| PIECE NO. | NAME OF PIECE | NO. REQ'D | MAT'L | NAVY SPEC LATEST ISSUE | STYLE NO. | REMARKS | CONTRACTORS DRAWING NO. |
|---|---|---|---|---|---|---|---|
| 1 | FRAME | 1 | SH.S. | 47S11 | IT#1 | REF. ASSY #1 7-B-8465 | 73-B-578 |
| 2 | FRAME RING | 1 | M.T.C.I. | 46I5 | IT#1 | | 7-B-8434 |
| 3 | FOOT | 1 | SH.S. | 47S11 | 987865 | | 53-B-640 |
| 4 | PIN | 2 | S. | 46S17 | 416711 | | 332116 |
| 5 | TERMINAL BOARD BRACKET | 2 | SH.S. | 47S11 | IT#1 | | 7-D-8542 |
| 6 | PIN | 1 | S. | 46S17 | IT#3 | | 32-D-402 |
| 7 | FIELD WINDING | 1 | E. EN. COPPER | 15W2 | ITS. #2-#3 | REF. ASSY #1 7-B-8464 | L-386504 |
| 8 | SPLICE LEAD | 2 | FIXT. WIRE | 15C1 | 388224 | | 801684 |
| 9 | LEAD | 2 | FIXT. WIRE | 15C1 | IT#6 | | 6-D-6319 |
| 10 | LEAD COMP. | 1 | FIXT. WIRE | 15C1 | ASSY. #5 | A1 | 6-D-6788 |
| 11 | LEAD COMP. | 1 | FIXT. WIRE | 15C1 | ASSY. #6 | F1 | 6-D-6788 |
| 12 | LEAD COMP. | 1 | FIXT. WIRE | 15C1 | ASSY. #2 | | 7-D-8557 |
| 13 | LEAD COMP. | 1 | FIXT. WIRE | 15C1 | ASSY. #4 | A2 | 6-D-6788 |
| 14 | LEAD COMP. | 1 | FIXT. WIRE | 15C1 | ASSY. #3 | | 7-D-8557 |
| 15 | POLE PUNCHING | 2 SETS | SH.S. | 47S11 | 277179 | 303 LBS. PER SET | 356295 |
| 16 | RIVET | 8 | S.BAR | 46S13 | IT#21 | 4 PER POLE | 816315 |
| 17 | ARMATURE COMP. | REF. | | RCS. 17 T035 | ASSY. #1 | | 7-B-8423 |
| 18 | SHAFT | 1 | S.BAR | 46-S-671 FS-X1315 | IT#1 | | 7-B-8423 |
| 19 | COMMUTATOR BAR | 48 | CU. | 47C2 | 840746 | REF. 840746 6-B-9575 | 6-B-9575 |
| 20 | STRIP | 48 | MICA | 17M5 | IT#5 | | 6-B-9575 |
| 21 | V-RING | 2 | MICA | 17M5 | 840748 | | 6-B-9575 |
| 22 | V-RING | 1 | S.BAR | 46-S-671 FS-X1314 | IT#8 | | 6-B-9575 |
| 23 | BUSHING | 1 | S.BAR | 46-S-671 FS-X1314 | IT#9 | | 6-B-9575 |
| 24 | COLLECTOR RING | 1 | BZ. ALLOY | 46B9 | IT#1 | REF. ASSY #1 86-D-183 | 792399 |
| 25 | SCREW | 1 | B. | 47B2 | 305374 | | 400377 |
| 26 | SCREW | 1 | B. | 47B2 | 305375 | | 400377 |
| 27 | MOULDED COMPOSITION | 1 SET | MOLDARTA | NOTE #8 | IT#4 | | 792399 |
| 28 | PIN | 1 | S.BAR | 46S17 | IT#7 | | 38-D-828 |
| 29 | ARMATURE INSUL. PCNG. | 2 | MICARTA | 17P5 | IT#13 | | 350079 |
| 30 | ARMATURE PUNCHING | 1 SET | ELEC. SH.S. | NOTE #5 | 573506 | 4876 LBS. | 350078 |
| 31 | OIL FLINGER | 1 | S.BAR | 46S17 | IT#2 | | 6-D-6783 |
| 32 | OIL FLINGER | 1 | S.BAR | 46S17 | IT#1 | | 6-D-6783 |
| 33 | INSULATING BUSHING | 2 | MICARTA | 17P5 | 406867 | | 816008 |
| 34 | ARMATURE INSUL. MAT'L. | 1 | SEE INS. MAT'L | | GROUP #1 | | 1-D-2857 |
| 35 | ARMATURE WINDING | 1 | PAPER COV. EN. COPPER | 15W2 | ITS. #1-#4 | | L-386506 |
| 36 | FRONT BRACKET | 1 | M.I. | 46I8 TYPE B | IT#1 | NOT GALVANIZED | 7-A-5635 |
| 37 | REAR BRACKET | 1 | M.I. | 46I8 TYPE B | IT#1 | NOT GALVANIZED | 7-A-5633 |
| 38 | PIN | 1 | S.BAR | 46S17 | IT#3 | | 32-D-402 |
| 39 | FRONT BALL BEARING | 1 | S. | 42B5 | IT#5 | 206 SINGLE SEAL | 7-D-8544 |
| 40 | REAR BALL BEARING | 1 | S. | 42B5 | IT#6 | 204 SINGLE SEAL | 7-D-8544 |
| 41 | BUSHING | 2 | FIBRE | NOTE #7 | IT#1 | REF. ASSY #1 7-B-8461 | 7-B-8461 |
| 42 | INSERT | 2 | B. | 47B2 | IT#2 | | 7-B-8461 |
| 43 | TERMINAL | 2 | B. | 47B2 | IT#3 | | 7-B-8461 |
| 44 | INSERT | 2 | B. | 47B2 | IT#1 | REF. ASSY #1 7-B-8432 | 7-B-8432 |
| 45 | TERMINAL | 2 | B. | 47B2 | IT#2 | C-4 | 7-B-8432 |
| 46 | BUSHING | 2 | FIBRE | NOTE #7 | IT#4 | | 7-B-8432 |
| 47 | CARBON COMP. (COLLECTOR) | 2 | CARBON | 17B8 | IT#5 | WA-10 | 4-D-8258 |
| 48 | CARBON COMP. (MOTOR) | 2 | CARBON | 17B8 | IT#2 | WL-20 | 5-D-4201 |
| 49 | BRUSH HOLDER SCREW | 2 | STANDARD BLACK BAKELITE | | IT#6 | | 1-D-8660 |
| 50 | BRUSH HOLDER SCREW | 2 | STANDARD BLACK BAKELITE | | IT#3 | | 1-D-8660 |
| 51 | GREASE CUP | 2 | S. | NOTE #9 | IT#1 | CADMIUM PLATED | 6-D-6415 |
| 52 | BALL BEARING GREASE | 1 SET | GREASE | 14L3 GRADE "B" | | #7754-2 | |
| 53 | CEMENT | 1 SET | ENAMEL | NOTE #6 | | #672-1 | |
| 54 | 1/8 IN PIPE PLUG | 2 | S. | 46S17 | 652874 | CADMIUM PLATED | 816483 |
| 55 | .190-32X1/4 LG. FIL. HD. M. SCREW | 4 | S. | 42S5 | | CADMIUM PLATED | |
| 56 | .190 SHAKEPROOF LOCKWASHER | 30 | S. | AC936A10 | IT#5 | CADMIUM OR ZINC PLATED | 5-D-4150 |
| 57 | END COVER | 1 | S | 47S11 | IT#1 | | 7-B-8426 |
| 58 | .190-32X1/2 LG. RD. HD. M. SCREW | 4 | S. | 42S5 | | CADMIUM PLATED | |
| 59 | COVER | 1 | SH.S | NOTE #10 | IT#1 | REF. ASSY #1 7-B-8429 | 7-B-8429 |
| 60 | BRACKET | 1 | SH.S. | 47S11 | IT#2 | | 7-B-8429 |
| 61 | BRACKET | 1 | SH.S | 47S11 | IT#3 | | 7-B-8429 |
| 62 | ELASTIC STOP NUT-CLINCH TYPE | 1 | S | 43B11 | IT#2 | CADMIUM PLATED | 6-D-6487 |
| 63 | .190-32X3/8 LG. FIL. HD. M. SCREW | 1 | S. | 42S5 | | CADMIUM PLATED | |
| 64 | WASHER | 1 | SH.S | 47S11 | IT#3 | CADMIUM PLATED | 4-D-4820 |
| 65 | .121 DIA. X 3/8 LG. TUBULAR RIVET | 4 | B | 43B11 | 549193 | | SL677.2 |
| 66 | WOODRUFF KEY | 1 | S. | #406 | | | |
| 67 | .164-32X1/4 LG. HDLESS SET SCREW | 1 | S. | 42S5 | IT#1 | CADMIUM PLATED | 7-D-8561 |
| 68 | TERMINAL BOARD | 1 | MICARTA | 17P5 | IT#2 | REF. ASSY #1 7-B-8440 | 7-B-8440 |
| 69 | .190-32X1 1/4 LG. STUD | 5 | B | 43B11 | 361701 | NICKEL PLATED | 801912 |
| 70 | | | | | | | |
| 71 | .190-32 HEX. MACH. SCREW NUT | 20 | B | 43B11 | | NICKEL PLATED | |
| 72 | WEDGE | 1 | MICARTA | 17P5 | IT#5 | | 97-D-667 |
| 73 | LEAD BUSHING | 1 | MOLDARTA | 17P4 | IT#1 | | 7-D-8540 |
| 74 | .190-32X3/8 LG. RD. HD. M. SCREW | 2 | S. | 42S5 | | CADMIUM PLATED | |
| 75 | .164-32X3/8 HDLESS SET SCREW | 5 | S. | 42S5 | 37847 | CADMIUM PLATED | 839111 |
| 76 | BRUSHHOLDER LEAD COMP. | 4 | FIXT. WIRE | 15C1 | ASSY #5 | | 5-D-7105 |
| 77 | .138-32X1/4 LG. RD. HD. M. SCREW | 4 | B | 47B2 | | | |
| 78 | .138 SHAKEPROOF LOCKWASHER | 8 | S | AC936A6 | IT#1 | CADMIUM OR ZINC PLATED | 5-D-4150 |
| 79 | .164 SHAKEPROOF WASHER | 4 | S. | AC936A8 | IT#2 | CADMIUM OR ZINC PLATED | 5-D-4150 |
| 80 | .164-32 HEX M SCREW NUT | 4 | S. | 42S5 | | CADMIUM PLATED | |
| 81 | 5/16-18X1 1/4 LG FIL HD M SCREW | 4 | S. | 42S5 | | CADMIUM PLATED | |
| 82 | .138-32X3/8 LG FIL HD M SCREW | 4 | B | 42S5 | | | |
| 83 | 1/4 LOCKWASHER | 8 | MN SI CU | 46B27 | 570065 | NON-CORR. | 860077 |
| 84 | 1/4-20X4 1/2 LG FIL HD M SCREW | 4 | S | 42S5 | IT#6 | CADMIUM PLATED | 68-D-421 |

—CONTINUED IN NEXT COLUMN—

| PIECE NO. | NAME OF PIECE | NO. REQ'D | MAT'L | NAVY SPEC LATEST ISSUE | STYLE NO. | REMARKS | CONTRACTORS DRAWING NO. |
|---|---|---|---|---|---|---|---|
| 85 | CAPACITOR (C-603) | 1 | MICA | RE-13A-389K RE-40A-154F | IT#7 | .033 MFD WKG. V. 600 | 8-D-2576 |
| 86 | LEAD COMP. | 1 | FIXT. WIRE | 15C1 | ASSY. #1 | AC-1 | 6-D-6791 |
| 87 | .164-32X3/8 LG. RD. HD. M. SCREW | 4 | S. | 42S5 | | CADMIUM PLATED | |
| 88 | 1/4-20X2 1/4 LG. FIL. HD. M. SCREW | 4 | S. | 42S5 | | CADMIUM PLATED | |
| 89 | CAPACITOR CARRIER PLATE | 2 | SH.S. | 47S11 | IT#1 | CADMIUM PLATED | 7-D-8537 |
| 90 | CAPACITOR (C-601) | 1 | FOIL PAPER | RE-13A-498C RE-48A-140A | IT#1 | .5 MFD WKG. V. 600 | 8-D-2577 |
| 91 | LEAD COMP. | 1 | FIXT. WIRE | 15C1 | ASSY. #2 | AC-2 | 6-D-6791 |
| 92 | .112-40X1/4 LG. RD. HD. M. SCREW | 10 | S. | 42S5 | | CADMIUM PLATED | |
| 93 | NAME PLATE (LUBRICATION) | 2 | SH.B | 42N2 | | #34713 | |
| 94 | NAME PLATE (SERIAL NO.) | 1 | SH.S. | 42N2 | | #36748 | |
| 95 | NAME PLATE (MOTOR) | 1 | ALUM. ALLOY | 42N2 | TDE | #36531 | |
| 96 | 3/8 LOCKWASHER | 4 | MN SI CU | 46B27 | 570066 | NON CORR. | 860077 |
| 97 | CAPACITOR (C-604) | 1 | MICA | RE-13A-389K RE-40A-154F | IT#8 | .033 MFD WKG. V. 600 | 8-D-2576 |
| 98 | CAPACITOR (C-602) | 1 | FOIL PAPER | RE-13A-498C RE-48A-140A | IT#2 | .5 MFD WKG. V. 600 | 8-D-2577 |
| 99 | CAPACITOR (C-601, C-602) | 1 | FOIL PAPER | RE-13A-498C RE-48A-140A | IT#3 | .5 MFD WKG. V. 600 | 8-D-2577 |
| 100 | CAPACITOR (C-603, C-604) | 1 | MICA | RE-13A-389K RE-40A-154F | IT#9 | .033 MFD WKG. V. 600 | 8-D-2576 |
| 101 | NAME PLATE (MOTOR) | 1 | ALUM. ALLOY | 42N2 | TDE-1 | #40233 | |

FOR EXTENSIONS SEE TABLE ON DWG # 36-J-145

## LIST OF SPARE PARTS AND TOOLS (PER VESSEL)

REPRODUCED FROM MFRS. DRAWING NO. *36-J-143* BUREAU NO. *14RE21J1631A*
NAMES AND NUMBERS OF VESSELS: SEE TITLE BLOCK
APPLICATION: *DRIVING GENERATOR ON TDE & TDE-1 RADIO TRANS.* APPLIANCE —D.C. MOTOR *ON MG. & GEN.*
NAVY CONTRACT NO. *SEE TITLE BLOCK* MANUFACTURER W. E. & M. CO.
SHIPBUILDER'S ORDER NO. *SEE TITLE BLOCK*

| ITEM NO. | NUMBER OF SETS | NUMBER PER SET | NAME OF PART OR TOOL | CATALOG OR SERIAL ORDERING DATA | MFRS. DRAWING AND PIECE NO. PC. | MFRS. DRAWING AND PIECE NO. DWG. NO. | BUREAU DRAWING AND PIECE NUMBER DWG. NO. |
|---|---|---|---|---|---|---|---|
| 1 | 1 | 1 | WOUND ARMATURE COMP. (E-601) | D-7-B-8423 ASSY. #1 | 17 | 36-J-143 | |
| 2 | 1 | 1 | FRONT BALL BEARING (ND-8506)(E-601) | D-7-D-8544 IT#5 | 39 | 36-J-143 | |
| 3 | 1 | 1 | REAR BALL BEARING (ND-8504)(E-601) | D-7-D-8544 IT#6 | 40 | 36-J-143 | |
| 4 | 2 | 1 | FIELD COIL SET COMPLETE (E-602) | D-7-B-8464 ASSY. #1 | 7 TO 14 | 36-J-143 | |
| 5 | 1 | 2 | BRUSH HOLDER (E-603) | D-7-B-8461 ASSY. #2 | 41 TO 43 | 36-J-143 | |
| 6 | 10 | 2 | CARBON COMPLETE (E-604) | D-5-D-4201 IT#2 | 48 | 36-J-143 | |
| 7 | 1 | 2 | BRUSH HOLDER CAP (E-605) | D-1-D-8660 IT#6 | 49 | 36-J-143 | |
| 8 | 1 | 1 | BRUSH HOLDER (C-4) (E-606) | D-7-B-8432 ASSY. #4 | 44 TO 46 | 36-J-143 | |
| 9 | 1 | 1 | BRUSH HOLDER (C-4) (E-607) | D-7-B-8432 ASSY. #4 | 44 TO 46 | 36-J-143 | |
| 10 | 10 | 2 | CARBON COMPLETE (E-608) | D-4-D-8258 IT#5 | 47 | 36-J-143 | |
| 11 | 1 | 2 | BRUSH HOLDER CAP (E-609) | D-1-D-8660 IT#3 | 50 | 36-J-143 | |
| 12 | 1 | 1 | CAPACITOR (C-601, C-602) | D-8-D-2577 IT#3 | 99 | 36-J-143 | |
| 13 | 1 | 1 | CAPACITOR (C-603, C-604) | D-8-D-2576 IT#9 | 100 | 36-J-143 | |

*MOTOR* SPARE PARTS S# *957988*
SPARE PARTS FOR USE WITH *CAY21851*
TYPE "FK" FRAME *D186 SEMI-ENCLOSED*
*1* HP. *11.6* AMP. *115* VOLT.
*3450* RPM. D.C. MOTOR S# *957987*
CASE NO.
GROSS WT. NET WT. *30 LBS.*

LEGEND
S STYLE NUMBER
D DRAWING NUMBER
L ELECTRICAL SPECIFICATION NUMBER
NOTE: SUFFIX LETTERS IN CONNECTION WITH IDENTIFYING NUMBERS FOR SPARE PARTS ARE FOR THE INFORMATION OF THE MANUFACTURER AND WILL NOT AFFECT THE MATERIAL FURNISHED ON FUTURE ORDERS.
WHEN REORDERING ALWAYS REFER TO MACHINE SERIAL NUMBER

NO. OF SHEETS 1 SHEET NO. 1

| NO. | DESCRIPTION | AUTHORITY | APP'D. | DATE |
|---|---|---|---|---|
| | | | | |

ALTERATIONS

**WESTINGHOUSE ELECTRIC & MFG. CO.**
**LIMA WORKS, LIMA OHIO, U.S.A.**

DRWG. NO. **36-J-143** SHEET *1* OF *1* SHEETS
DRAWN BY: *C.R.* DATE: *8-10-44* INSPECTED BY ____ DATE ____
TRACED BY: *C.R.* DATE: *"* APPROVED BY ____ DATE ____
SCALE *N.T.S.* REPRODUCTION OF FINAL PLANS MADE ____
DIMENSIONS IN INCHES

PLAN EXAMINED & FOUND SATISFACTORY

BU. SHIPS APPROVAL LTR. INM APPROVAL LTR.

DATE INSPECTOR OF NAVAL MATERIAL

OUTLINE & ASSEMBLY (OR SPECIFICATIONS FOR)

*TYPE CAY21851 DC MOTOR*
*1 H.P., 3450 RPM, 115 VOLTS, 11.6 AMPS, DC*

*A UNIT OF MODELS TDE & TDE-1 RADIO EQUIPMENT*

CONTRACT NUMBER: *NXs 3179* / *NXss 20802* CONTRACT DATE: *6-30-42* / *6-1-43*

**BUREAU OF SHIPS PLAN NUMBER**

*14-RE-21-J-1631-A*

CAY-T-160-2—Motor, Type CAY-21851, 115 V. D.C., a Unit of Type CAY-21848 Rectifier Power Unit for Navy Models TDE and TDE-1, Outline, Winding Data and Specifications. (Dwg. 36-J-143)

# DESCRIPTIVE DATA

## (A) IDENTIFICATION

MANUFACTURER WESTINGHOUSE ELEC & MFG. CO.
MANUFACTURER'S TYPE *FK* CLASS *A* FRAME NO. *D186*
NAVY CONTRACT OR SHIPBUILDER'S ORDER *SEE TITLE BLOCK* DATE
INSTALLED ON SEE TITLE BLOCK FOR VESSELS INVOLVED
FOR DRIVING *CAY21854 GENERATOR*
MANUFACTURER OF DRIVEN AUXILIARY *WESTINGHOUSE ELECTRIC & MFG. CO.*
REFERENCE SPECIFICATIONS
THE MOTORS DESCRIBED HEREUNDER WILL CONFORM STRICTLY WITH NAVY DEPARTMENT SPECIFICATION 17M17 INT. MOTORS D.C. FOR SHIPBOARD USE OF SEPT. 1, 1940 AND OF THE SPECIFICATIONS FOR THE VESSEL. EXCEPT AS SPECIFICALLY ENUMERATED BELOW.
REFERENCE DRAWINGS
TITLE OF DWG. MANUFACTURER'S NO. BU. SHIPS NO.

## (B) MANUFACTURER'S DESCRIPTIVE DATA

MOTOR CLASSIFICATION
DEGREE OF ENCLOSURE *SEMI-ENCLOSED.*
METHOD OF COOLING *NATURAL VENTILATED.* SERVICE-NAVY *A*
SPEED CLASS *CONSTANT.* DUTY CLASSIFICATION *CONTINUOUS.*
VOLTAGE • *230* R.P.M. • *3450* H.P. • *1*
TYPE OF WINDING *COMPOUND.* AMPERES • *5.8*
AMBIENT TEMP *40* C. CLASS OF INSULATION *A*
TEMPERATURE RISE, TABLE METHOD • 1 & • 2 CONCURRENTLY
MOUNTING (HORIZONTAL OR VERTICAL) *HORIZONTAL.*
DATA MARKED • TO APPEAR ON NAME PLATE.
PERFORMANCE

| | | EFFICIENCY | AMPERES (230 V.) |
|---|---|---|---|
| (A) GUARANTEED | 4/4 | 71% | 5.8 |
| (B) GUARANTEED | 3/4 | 66% | 4.7 |
| (C) GUARANTEED | 1/2 | 56% | 3.7 |
| (D) | 1/4 | | |

SPECIAL ATTACHMENTS: *NONE*

WEIGHTS
(A) MOTOR COMPLETE *71* LBS. (B) ROTOR COMPLETE *11¼* LBS.
(C) ALL SPARES BOXED, INCLUDING CONTROL SPARES ____ LBS.
SHAFT, BEARINGS & LUBRICATION
(A) SHAFT MATERIAL *COLD DRAWN CARBON STEEL* (B) TYPE OF BEARINGS—BALL
(C) BALL BEARING IDENTIFICATION
NAVY TYPE *A*, CLASS *a* GRADE *II* MANUFACTURER'S *SAE#204 & #206 SINGLE SEAL.*
(D) TYPE OF LUBRICATION GREASE NAVY SYMBOL 14-L-3 GRADE "*B*"
(E) BEARINGS SHOWN ARE APPROVED BY BALL BEARING MANUFACTURER AS REQUIRED BY PAR 7 c), APPENDIX I OF NAVY SPEC. 42-B-5.
BRG. M'F'G. ____ SIGNED ____
POLES
MAIN (A) NO. *2* (B) AIR GAP NOMINAL *.020 IN. SINGLE*
COMM. (C) NO. *0* (D) AIR GAP NOMINAL
ARMATURE
(A) DIAM. *3.375* (B) CORE LENGTH *3¼*
COMMUTATOR
(A) DIAM. *2¼* (B) LENGTH *1* (C) WEARING DEPTH *⅛ IN. ON DIA.*
(D) *1/32* UNDERCUT (E) INSUL: BET. BARS *MICA* TO GROUND *MICA*
BRUSHES: *INPUT*
(A) NO. OF STUDS *2* (B) NO. OF BRUSHES PER STUD *1*
(C) DIMENSIONS: LENGTH *1¼* WIDTH *.748* THICKNESS *.248* GRADE *WL20*
(D) GRADE NAVY *B* MANUFACTURER *STACKPOLE CARBON CO.*
*BRUSHES: SLIP RING*
*(A) NO. OF STUDS 2 (B) NO. OF BRUSHES PER STUD 1*
*(C) DIMENSIONS: LENGTH 1¼ WIDTH .373 THICKNESS .248 GRADE WA10*
*(D) GRADE: NAVY B MANUFACTURER STACKPOLE CARBON CO.*
*EXCEPTIONS TO NAVY SPECIFICATIONS: SEE BOTTOM OF NEXT COLUMN.*
CAPACITORS

| PIECE NOS. | NAVY SYMBOL NOS. | | MANUFACTURER | MFGR'S DESIGNATION |
|---|---|---|---|---|
| 85-97-100 | C-613 | C-614 | CORNELL DUBILIER | 9AS 11025 |
| 90-98-99 | C-611 | C-612 | CORNELL DUBILIER | DYR 6050 |

## (C) TYPE TESTS

TO BE MADE ONLY ON SELECTED MOTORS REFER TO SPECIFICATION 17-M-17
EFFECTIVENESS OF ENCLOSURE *OK.*

EFFICIENCY

| | |
|---|---|
| FULL LOAD I²R LOSSES IN WINDINGS | 99.8 |
| BEARING & BRUSH FRICTION AND WINDAGE | 143.4 |
| CORE LOSSES | 99.0 |
| STRAY LOAD LOSSES | |
| CALCULATED EFFICIENCY AT 1/2 LOAD | 60.4% |
| 3/4 LOAD | 69.6% |
| 4/4 LOAD | 74.5% |

RESISTANCE

| | ARM | SH. FLD. | SER. FLD. | COMM. FLD. |
|---|---|---|---|---|
| 23°C | 1.066 | 936.6 | .274 | |
| 75°C | 1.270 | 1100 | .320 | |

SPEED TEST

| | COLD LINE VOLTS | COLD LINE AMPS | COLD SHUNT FLD. VOLTS | COLD SHUNT FLD. AMPS | COLD R.P.M. | HOT LINE VOLTS | HOT LINE AMPS | HOT SHUNT FLD. VOLTS | HOT SHUNT FLD. AMPS | HOT R.P.M. |
|---|---|---|---|---|---|---|---|---|---|---|
| NO LOAD | 230 | 1.4 | | | 3680 | 230 | 1.4 | | | 3860 |
| FULL LOAD | 230 | 5.7 | | | 3470 | 230 | 5.7 | | | 3567 |
| LOAD | | | | | | | | | | |
| NO LOAD | | | | | | | | | | |
| FULL LOAD | | | | | | | | | | |
| LOAD | | | | | | | | | | |

## HEATING

NORMAL LOAD HEAT RUN

| TIME | LINE VOLTS | LINE AMPS | SHUNT FLD. VOLTS | SHUNT FLD. AMPS | NO. 1 | NO. 2 | NO. 3 | NO. 4 | NO. 5 | NO. 6 | ROOM |
|---|---|---|---|---|---|---|---|---|---|---|---|
| 8:30 | | | | | 23 | | 23 | | 23 | | 22 |
| 9:00 | | | | | 46 | | 42 | | 30 | | 23 |
| 9:30 | | | | | 50 | | 46.5 | | 34 | | 23 |
| 10:00 | | | | | 52 | | 48 | | 36 | | 23 |
| 10:30 | | | | | 44.5 | | 49.5 | | 37.6 | | 24 |
| 11:00 | | | | | 55 | | 56 | | 38 | | 24 |
| 11:30 | | | | | 55.5 | | 56 | | 38 | | 24 |
| 12:00 | | | | | 56.5 | | 51 | | 39 | | 25 |
| 12:30 | 230 | 5.7 | | | 56.5 | | 51 | | 39 | | 25 |
| TEMP. RISE DEGREES C. WHILE RUNNING | | | | | 31 | | 26 | | 14 | | 25 |
| TEMP. RISE DEGREES C. AFTER SHUTDOWN | | | | | 34.5 | | 27.5 | | 14 | | 26 |

LOCATION OF THE NUMBER IN THE TABLE NORMAL LOAD HEAT RUN ABOVE SHOULD BE INDICATED:
NO. 1 *FLD.* NO. 2 ____ NO. 3 *FRAME* NO. 4 ____ NO. 5 *BRG.* NO. 6 ____
SHUTDOWN TEMPERATURES
ARMATURE CORE ____ COMMUTATOR ____
ARMATURE WINDING ____ FRONT BRG. *39.5* REAR BRG. *56*
OVERSPEED *4300* TIME *5 MIN.* REMARKS—*NORMAL NOISE & VIB.*
DIELECTRIC STRENGTH *1800 VOLTS FOR 1 SECOND*
INSULATION RESISTANCE *15 MEGOHMS AT 44°C 3500 MEGOHMS AT 25°C*
INSPECTOR'S SIGNATURE ____
OFFICE ____ DATE ____

## (D) CONCLUSION

IN VIEW OF THE TEST DATA SHOWN ABOVE AND THE SATISFACTORY HORSEPOWER CAPACITY, SPEED CHARACTERISTICS, POWER FACTORS AND EFFICIENCIES WHEN DRIVING THE CONNECTED AUXILIARY THROUGHOUT ITS RANGE OF SPECIFIED OPERATING CONDITIONS AS REPORTED BY I.N.M. LETTER ____ OF ____ 194_ THE MOTORS ARE CONSIDERED AS MEETING SPECIFICATION AND CONTRACT REQUIREMENTS AND SUITABLE FOR THE PURPOSE INTENDED EXCEPT
INSPECTOR'S SIGNATURE ____
OFFICE ____ DATE ____

## —NOTES—

#1 NAVY DEPARTMENT MATERIAL SPECIFICATION OF ISSUE IN EFFECT SEPT. 1, 1940 ARE APPLICABLE (17M17 INT.)
#2 #10 THREADS (.190 DIA, 32 THDS PER INCH) TO BE IN ACCORDANCE WITH NATIONAL FINE THREAD SERIES PER 17M17 INT PAR. C-5A(2). ALL OTHER THDS. TO BE IN ACCORDANCE WITH NATIONAL COARSE THD. SERIES PER 17M17 INT PAR. C-5b(1), UNLESS OTHERWISE SPECIFIED.
#3 CADMIUM PLATING TO BE IN ACCORDANCE WITH NAVY DEPT. SPEC. 46P1.
#4 ALL METAL SURFACES INSIDE OF MOTOR PROTECTED WITH A COAT OF ZINC CHROMATE PRIMER, (WESTINGHOUSE #212-T) (NAVY AERO. SPEC. P27-b).
#5 THIS MATERIAL IS EQUIVALENT TO, OR BETTER THAN THE COMMERCIAL GRADE KNOWN AS "SILICON STEEL, ELECTRICAL GRADE."
#6 A MIXTURE OF SHELLAC AND GUMS IN ALCOHOL WITH A PLASTICIZER AND LOADED WITH RED IRON OXIDE (WESTINGHOUSE #672-1.)
#7 A MOLDED FIBRE TUBE. (WESTINGHOUSE #5857-2)
#8 A COMPOSITION OF SYNTHETIC RESIN, ASBESTOS AND PIGMENTS.
#9 THIS CUP WILL MEET NAVY SPEC. 45C7, TYPE D, EXCEPT CUP WILL BE MADE OF STEEL AND CADMIUM PLATED PER NAVY SPEC. 46P1, IN LINE WITH CHIEF OF BU. SHIPS LETTER S63-1(3660) EN.28/A2-11 DATED 2-7-42. THIS CUP IS CATALOGUE STYLE #GH-7403 SIZE 000, AMERICAN STAMPING CO., BATTLE CREEK, MICH.
#10 THIS MATERIAL IS BRIGHT ANNEALED, HALF HARD, COLD ROLLED CARBON-STEEL (A.I.S.I. SPEC. #C-1070) AND IS ZINC PLATED TO MEET (NAVY SPEC. 46P2) OF ISSUE APRIL 1, 1938.

### —ARMATURE WINDING & INSULATION DATA—

ARMATURE CORE HAS 16 SLOTS. COMMUTATOR HAS 48 BARS. ARMATURE IS WOUND WITH 8-9-9 TURNS PER COIL OF .036 DIA. (#19) PAPER COVERED ENAMEL COPPER WIRE. ARMATURE HAS 52 WIRES PER SLOT.
ENDS OF FIRST COIL LIE IN BARS #24 & #25. FIRST COIL LIES IN SLOTS #1 & #8. WIRES ARE CONNECTED TO BARS #1 & #25 AND TAKEN THRU THE ARMATURE SLOTS TO THE SLIP RINGS. WINDING IS PROGRESSIVE.
COILS ARE RETAINED IN SLOTS BY 1/32 TK. HARD FIBRE WEDGE.
CROSS SECTION OF COILS SHOWS METHOD OF INSULATING WIRES IN SLOTS.
COMPLETE WOUND ARMATURE IS TREATED 3 TIMES IN WESTINGHOUSE VARNISH #7669 WITH BAKING 12 HOURS AT 120°C AFTER EACH TREATMENT.

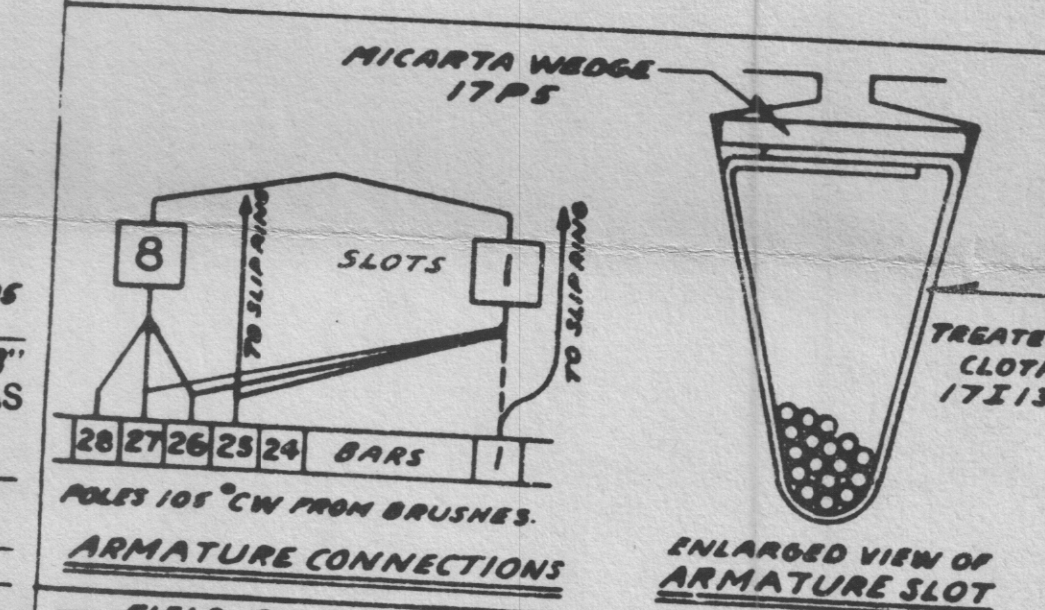

ARMATURE CONNECTIONS
ENLARGED VIEW OF ARMATURE SLOT

### —FIELD COIL WINDING & INSULATION DATA—

EACH SHUNT COIL CONSISTS OF 4600 TURNS OF .0113 DIA. (#29) ENAMELED COPPER WIRE WOUND ON A MOULD 3¾ IN. LONG BY 2 IN. WIDE AND ⅛ IN. RADIUS, BY 13/16 IN. THICK. SHUNT COIL IS INSULATED FROM SERIES COIL WITH 2 LAYERS OF .010 TK. TREATED CLOTH PLACED OVER THE COIL AND ON THE SIDES AND HELD IN PLACE WITH SCOTCH FLAT BACK TAPE.
EACH SERIES COIL CONSISTS OF 24 TURNS OF THE .057 DIA. (#15) ENAMELED COPPER WIRE WHICH IS WOUND OVER THE SHUNT COIL. THE COIL IS TIED AT THE CORNERS. LEADS ARE ATTACHED AND BOUND TIGHTLY TO COIL, APPROXIMATELY ONE TURN OF 15 OF .005 CABLE BEING USED BETWEEN LEADS AND WIRE OF SHUNT WINDING TO PROTECT THE WINDING. LEAD JOINTS ARE SOLDERED AND INSULATED WITH A CELLULOSE ACETATE BUSHING. LEAD CROSSOVERS AND CONNECTIONS ARE INSULATED WITH A CELL OF .015 TK. RAG PAPER. COILS ARE BENT TO SHAPE AND THEN DIPPED IN WESTINGHOUSE VARNISH #6109 AND BAKED 14 HOURS AT 120°C.
COILS ARE THEN TAPED OVER ALL WITH ONE LAYER OF .010 TK. TREATED CLOTH TAPE HALF OVERLAPPED, FOLLOWED BY ONE LAYER OF .007 TK. COTTON TAPE HALF OVERLAPPED. COILS ARE THEN GIVEN 3 SEALING COATS OF WESTINGHOUSE VARNISH #6108. EACH COAT IS APPLIED BY DIPPING COILS FOR ONE MINUTE AND BAKING 8 HOURS AT 120°C. LEADS ARE 41 OF .010 RUBBER AND COTTON INSULATED CABLE.

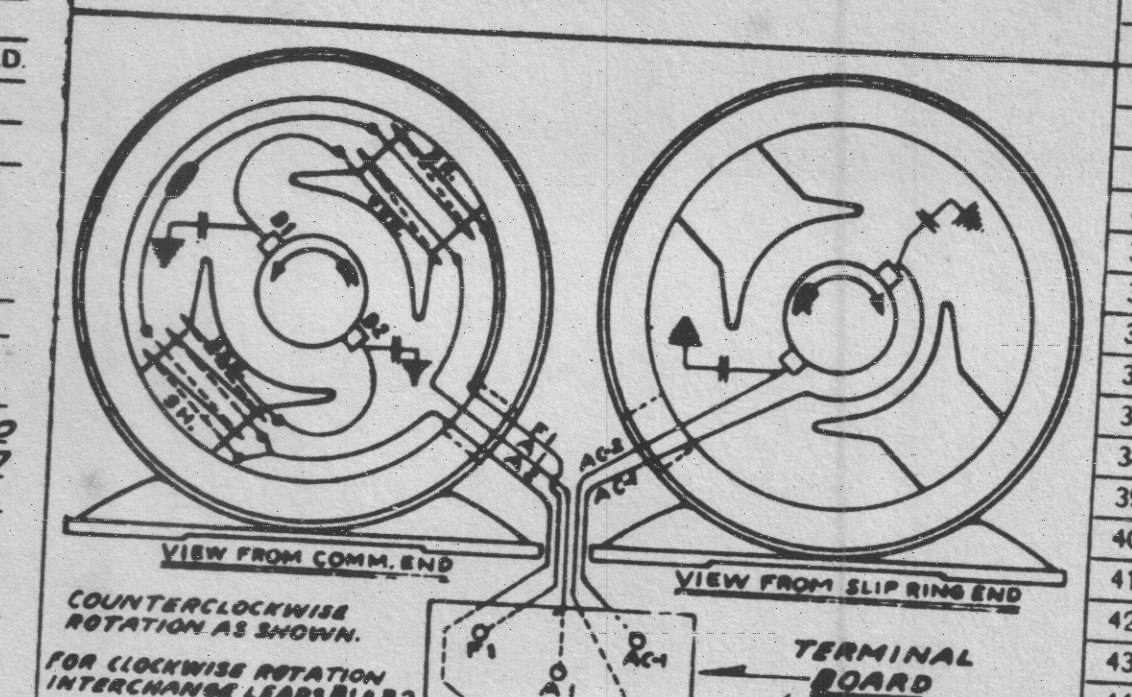

D.C. CONNECTIONS——INPUT:——
CONNECT A2 TO ONE LINE WIRE AND A1 & F1 TO THE OTHER LINE WIRE.
A.C. CONNECTIONS——OUTPUT:——
CONNECT AC1 TO ONE LINE WIRE AND AC2 TO THE OTHER LINE WIRE.
ROTATION AND CONNECTION DIAGRAM

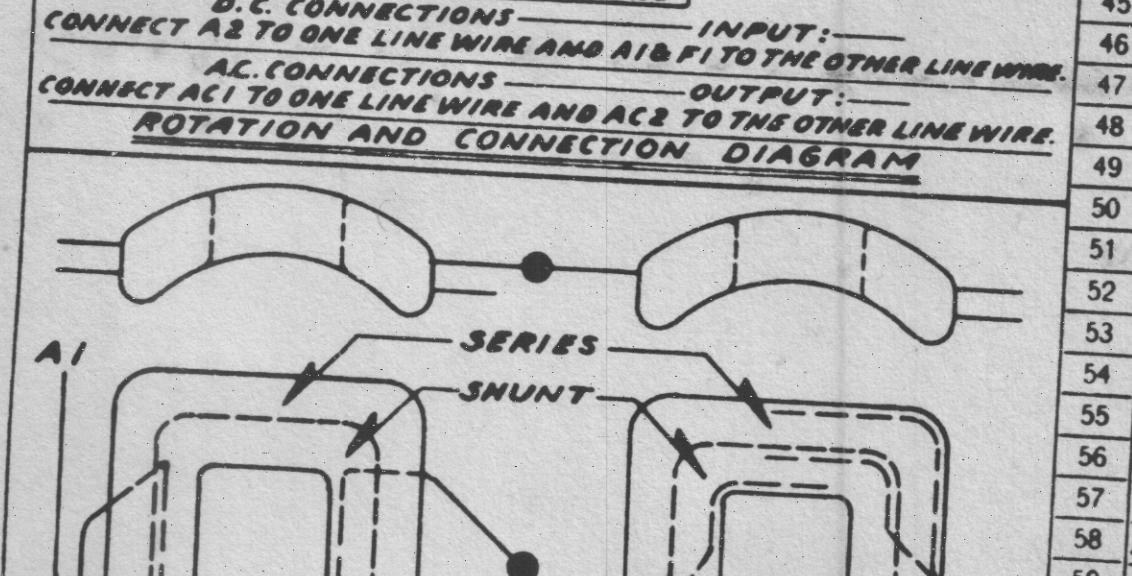

FIELD COILS

### EXCEPTIONS TO NAVY SPEC. 17M17

#1 E-3a THE FRAME RING IS MADE OF SEMI-STEEL INSTEAD OF STEEL.
#2 C-7d(6) PREHEATING OF FIELD COILS AND ARMATURE BEFORE VARNISH DIPPING IS OMITTED.
#3 WESTINGHOUSE #6109 & #7669 VARNISH HEAT ENDURANCE TEST IS 250 HOURS. (GRADE BB VARNISH NAVY SPEC. 52V13 REQUIRES 500 HOURS.)
#4 E-12c BRUSHHOLDERS ARE CARTRIDGE TYPE, NOT ADJUSTABLE.
#5 E-8c COMMUTATOR IS SECURED TO SHAFT BY PRESS FIT.
#6 E-8d WEARING DEPTH IS ⅛ IN. ON DIAMETER.
#7 E-6b BEARINGS ARE SINGLE SEALED WITH NO SUPPLEMENTARY HOUSING SHIELD. A ROTATING OIL FLINGER IS ASSEMBLED ON THE SHAFT, ADJACENT TO THE BEARING.
#8 E-7b ARMATURE LAMINATIONS ARE NOT CLAMPED.
#9
#10 CREEPAGE DISTANCE TO GROUND—⅛ IN.
DISTANCE THRU AIR TO GROUND—⅛ IN.
CREEPAGE DISTANCE TO OPPOSITE POLARITY—¼ IN.
DISTANCE THRU AIR TO OPPOSITE POLARITY—⅛ IN.
#11 INPUT BRUSHES ARE GRADE WL-20 MANUFACTURED BY STACKPOLE CARBON CO.
#12 SLIP RING BRUSHES ARE GRADE WA-10 MANUFACTURED BY STACKPOLE CARBON CO.

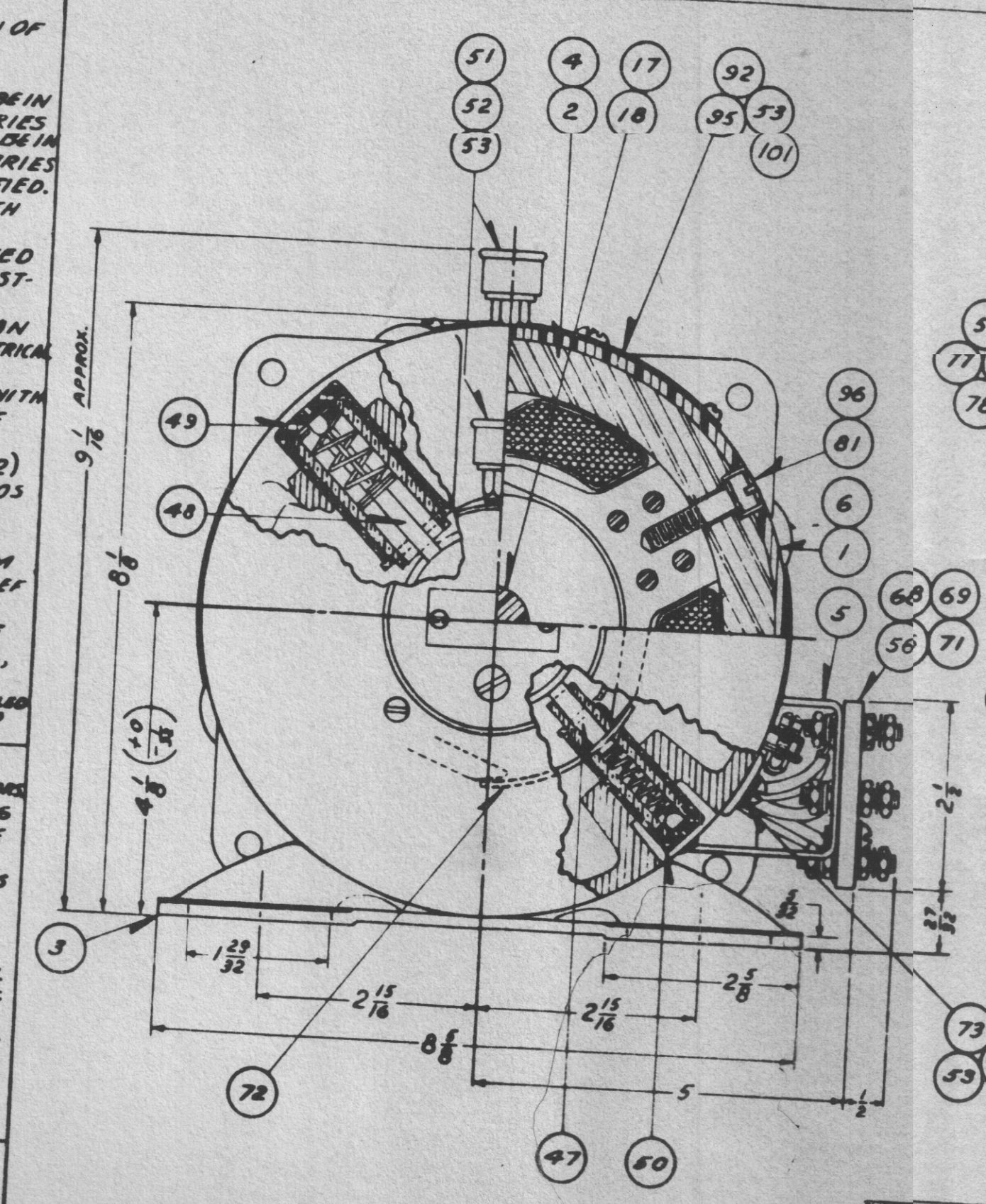

NOT TO SCALE

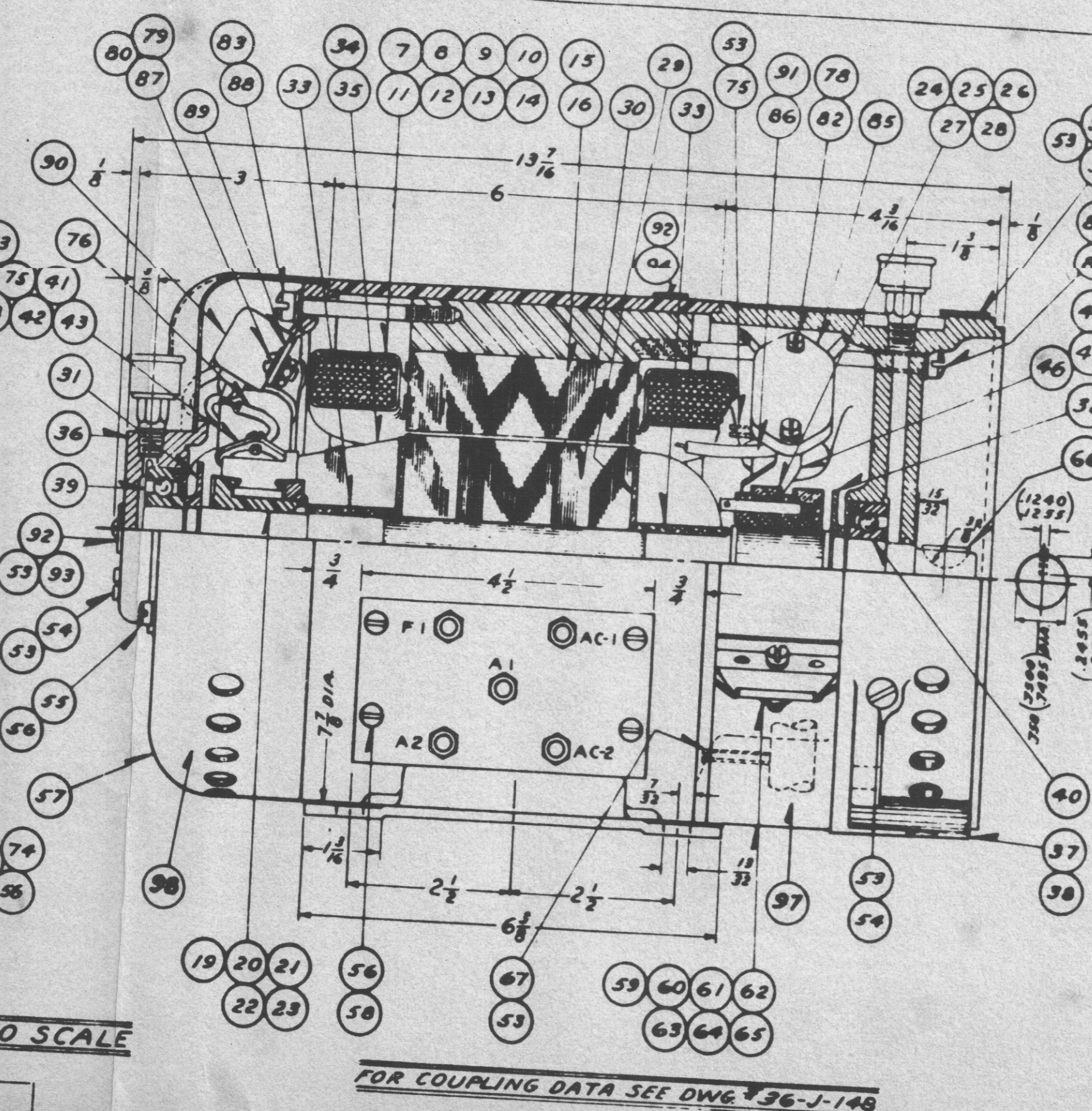

FOR COUPLING DATA SEE DWG. #36-J-148

## LIST OF MATERIAL

QUANTITIES ARE FOR ONE MACHINE

| PIECE NO. | NAME OF PIECE | NO. REQ'D | MAT'L | NAVY SPEC LATEST ISSUE | STYLE NO. | REMARKS | CONTRACTORS DRAWING NO. |
|---|---|---|---|---|---|---|---|
| 1 | FRAME | 1 | SH.S. | 47S11 | IT.#1 | REF. ASSY#1 7-B-8406 | 73-B-578 |
| 2 | FRAME RING | 1 | H.T.C.I. | 46I5 | IT.#1 | | 7-B-8434 |
| 3 | FOOT | 1 | SH.S. | 47S11 | 987885 | | 59-B-640 |
| 4 | PIN | 2 | S. | 46S17 | 416711 | | 332116 |
| 5 | TERMINAL BOARD BRACKET | 2 | SH.S. | 47S11 | IT.#1 | | 7-D-8542 |
| 6 | PIN | 1 | S. | 46S17 | IT.#3 | | 32-D-402 |
| 7 | FIELD WINDING | 1 | EN. COP. WIRE | 15W2 | ITS.#2-#3 | REF. ASSY#1 7-B-8464 | L-386505 |
| 8 | SPLICE LEAD | 2 | FIXT. WIRE | 15C1 | 388224 | | 801684 |
| 9 | LEAD | 2 | FIXT. WIRE | 15C1 | IT.#6 | | 6-D-6319 |
| 10 | LEAD COMP. | 1 | FIXT. WIRE | 15C1 | ASSY.#5 | A1 | 6-D-6788 |
| 11 | LEAD COMP. | 1 | FIXT. WIRE | 15C1 | ASSY.#6 | F1 | 6-D-6788 |
| 12 | LEAD COMP. | 1 | FIXT. WIRE | 15C1 | ASSY.#2 | | 7-D-8557 |
| 13 | LEAD COMP. | 1 | FIXT. WIRE | 15C1 | ASSY.#4 | A2 | 6-D-6788 |
| 14 | LEAD COMP. | 1 | FIXT. WIRE | 15C1 | ASSY.#3 | | 7-D-8557 |
| 15 | POLE PUNCHING | 2 SETS | SH.S. | 47S11 | 277179 | 3.01 LBS. PER SET | 356295 |
| 16 | RIVET | 8 | S.BAR | 46S13 | IT.#21 | 4 PER POLE | 816315 |
| 17 | ARMATURE COMP. | REF. | | PCS.17T035 | ASSY.#2 | | 7-B-8423 |
| 18 | SHAFT | 1 | S.BAR | 46-S-471 FS-X1335 | IT.#1 | | 7-B-8423 |
| 19 | COMMUTATOR BAR | 48 | CU. | 47C2 | 840746 | REF. ASSY#1 6-B-9575 | 6-B-9575 |
| 20 | STRIP | 48 | MICA | 17M5 | IT.#5 | | 6-B-9575 |
| 21 | V-RING | 2 | MICA | 17M5 | 840748 | | 6-B-9575 |
| 22 | V-RING | 1 | S.BAR | 46-S-471 FS-X1314 | IT.#8 | | 6-B-9575 |
| 23 | BUSHING | 1 | S.BAR | 46-S-471 FS-X1314 | IT.#9 | | 6-B-9575 |
| 24 | COLLECTOR RING | 1 | BZ.ALLOY | 46B9 | IT.#1 | REF. ASSY#1 38-D-183 | 792399 |
| 25 | SCREW | 1 | B. | 47B2 | 305374 | | 400377 |
| 26 | SCREW | 1 | B. | 47B2 | 305375 | | 400377 |
| 27 | MOULDED COMPOSITION | 1 SET | MOLDARTA | NOTE #8 | IT.#4 | | 792399 |
| 28 | PIN | 1 | S.BAR | 46S17 | IT.#7 | | 38-D-828 |
| 29 | ARMATURE INSUL. PCHG. | 2 | MICARTA | 17P5 | IT.#13 | | 350079 |
| 30 | ARMATURE PUNCHING | 1 SET | ELEC. SH.S. | NOTE #5 | 573506 | 4.075 LBS. | 350078 |
| 31 | OIL FLINGER | 1 | S.BAR | 46S17 | IT.#2 | | 6-D-6783 |
| 32 | OIL FLINGER | 1 | S.BAR | 46S17 | IT.#1 | | 6-D-6783 |
| 33 | INSULATING BUSHING | 2 | MICARTA | 17P5 | 406867 | | 816008 |
| 34 | ARMATURE INSUL. MAT'L. | 1 | SEE INS. MAT'L | | GROUP#1 | | 1-D-2857 |
| 35 | ARMATURE WINDING | 1 | PAPER COV. EN. COP. WIRE | 15W2 | ITS.#1-#4 | | L-386505 |
| 36 | FRONT BRACKET | 1 | M.I. | 46I8 TYPE B | IT.#1 | NOT GALVANIZED | 7-A-5635 |
| 37 | REAR BRACKET | 1 | M.I. | 46I8 TYPE B | IT.#1 | NOT GALVANIZED | 7-A-5633 |
| 38 | PIN | 1 | S.BAR | 46S17 | IT.#3 | | 32-D-402 |
| 39 | FRONT BALL BEARING | 1 | S. | 42B5 | IT.#5 | 7204 SINGLE SEAL | 7-D-8544 |
| 40 | REAR BALL BEARING | 1 | S. | 42B5 | IT.#6 | 7206 SINGLE SEAL | 7-D-8544 |
| 41 | BUSHING | 2 | FIBRE | NOTE #7 | IT.#1 | REF. ASSY#2 7-B-8461 | 7-B-8461 |
| 42 | INSERT | 2 | B. | 47B2 | IT.#2 | | 7-B-8461 |
| 43 | TERMINAL | 2 | B. | 47B2 | IT.#3 | | 7-B-8461 |
| 44 | INSERT | 2 | B. | 47B2 | IT.#1 | REF. ASSY#4 7-B-8432 | 7-B-8432 |
| 45 | TERMINAL | 2 | B. | 47B2 | IT.#2 | C-4 | 7-B-8432 |
| 46 | BUSHING | 2 | FIBRE | NOTE #7 | IT.#4 | | 7-B-8432 |
| 47 | CARBON COMP. (COLLECTOR) | 2 | CARBON | 17B8 | IT.#5 | WA-10 | 4-D-8258 |
| 48 | CARBON COMP. (MOTOR) | 2 | CARBON | 17B8 | IT.#2 | WL-20 | 5-D-4201 |
| 49 | BRUSH HOLDER SCREW | 2 | STANDARD BLACK BAKELITE | | IT.#6 | | 1-D-8660 |
| 50 | BRUSH HOLDER SCREW | 2 | STANDARD BLACK BAKELITE | | IT.#3 | | 1-D-8660 |
| 51 | GREASE CUP | 2 | S. | NOTE #9 | IT.#1 | CADMIUM PLATED | 6-D-6415 |
| 52 | BALL BEARING GREASE | 1 SET | GREASE | 14L3 GRADE B | | #7754-2 | |
| 53 | CEMENT | 1 SET | ENAMEL | NOTE #6 | | #672-1 | |
| 54 | ⅛ IN. PIPE PLUG | 2 | S. | 46S17 | 652874 | CADMIUM PLATED | |
| 55 | .190-32X½ LG. FIL. HD. M. SCREW | 4 | S. | 42S5 | | CADMIUM PLATED | 816483 |
| 56 | .190 SHAKEPROOF LOCKWASHER | 30 | S. | AC936A10 | IT.#5 | CADMIUM OR ZINC PLATED | |
| 57 | END COVER | 1 | S. | 47S11 | IT.#1 | | 5-D-4150 |
| 58 | .190-32X½ LG. RD. HD. M. SCREW | 4 | S. | 42S5 | | CADMIUM PLATED | 7-B-8926 |
| 59 | COVER | 1 | SH.S. | NOTE #10 | IT.#1 | REF. ASSY#1 7-B-8429 | |
| 60 | BRACKET | 1 | SH.S. | 47S11 | IT.#2 | | 7-B-8429 |
| 61 | BRACKET | 1 | SH.S. | 47S11 | IT.#3 | | 7-B-8429 |
| 62 | ELASTIC STOP NUT-CLINCH TYPE | 1 | S. | 43B11 | IT.#2 | CADMIUM PLATED | 7-B-8429 |
| 63 | .190-32X⅜ LG. FIL. HD. M. SCREW | 1 | S. | 42S5 | | CADMIUM PLATED | 6-D-6487 |
| 64 | WASHER | 1 | SH.S. | 47S11 | IT.#3 | CADMIUM PLATED | |
| 65 | .121 DIA. X¼ LG. TUBULAR RIVET | 4 | B | 43B11 | 549193 | | 4-D-4820 |
| 66 | WOODRUFF KEY | 1 | S. | #406 | | | SL677.2 |
| 67 | .164-32X1 LG. HD. LESS SET SCREW | 1 | S. | 42S5 | IT.#1 | CADMIUM PLATED | |
| 68 | TERMINAL BOARD | 1 | MICARTA | 17P5 | IT.#2 | REF. ASSY#3 7-B-8440 | 7-D-8561 |
| 69 | .190-32X1¼ LG. STUD | 5 | B | 43B11 | 361701 | NICKEL PLATED | 7-B-8440 |
| 70 | | | | | | | |
| 71 | .190-32 HEX. MACH. SCREW NUT | 20 | B. | 43B11 | | NICKEL PLATED | 801912 |
| 72 | WEDGE | 1 | MICARTA | 17P5 | IT.#5 | | |
| 73 | LEAD BUSHING | 1 | MOLDARTA | 17P4 | IT.#1 | | 97-D-667 |
| 74 | .190-32X5/16 LG. RD. HD. M. SCREW | 2 | S. | 42S5 | | CADMIUM PLATED | 7-D-8540 |
| 75 | .164-32X⅜ HD. LESS SET SCREW | 5 | S. | 42S5 | 37847 | CADMIUM PLATED | |
| 76 | BRUSHHOLDER LEAD COMP. | 4 | FIXT. WIRE | 15C1 | ASSY.#5 | | 839111 |
| 77 | .138-32X¼ LG. RD. HD. M. SCREW | 4 | B. | 47B2 | | | 5-D-7105 |
| 78 | .138 SHAKEPROOF LOCKWASHER | 8 | S. | AC936A6 | IT.#1 | | |
| 79 | .164 SHAKEPROOF WASHER | 4 | S | AC936A8 | IT.#2 | CADMIUM OR ZINC PLATED | 5-D-4150 |
| 80 | .164-32 HEX. M. SCREW NUT | 4 | S. | 42S5 | | CADMIUM OR ZINC PLATED | 5-D-4150 |
| 81 | 5/16-18X1½ LG. FIL. HD. M. SCREW | 4 | S. | 42S5 | | CADMIUM PLATED | |
| 82 | .138-32X⅜ LG. FIL. HD. M. SCREW | 4 | B. | 42S5 | | CADMIUM PLATED | |
| 83 | ¼ LOCKWASHER | 8 | MN-SI-CU | 46B27 | 570065 | NON-CORR. | 860077 |
| 84 | ¼-20X4¼ LG. FIL. HD. M. SCREW | 4 | S | 42S5 | IT.#6 | CADMIUM PLATED | 68-D-421 |

—CONTINUED IN NEXT COLUMN—

| PIECE NO. | NAME OF PIECE | NO. REQ'D | MAT'L | NAVY SPEC LATEST ISSUE | STYLE NO. | REMARKS | CONTRACTORS DRAWING NO. |
|---|---|---|---|---|---|---|---|
| 85 | CAPACITOR (C-613) | 1 | MICA | RE-13A-383K RE-48A-154F | IT.#10 | .025 MFD. WKG.V. 600 | 8-D-2576 |
| 86 | LEAD COMP. | 1 | FIXT. WIRE | 15C1 | ASSY.#1 | AC-1 | 6-D-6791 |
| 87 | .164-32X5/16 LG. RD. HD. M. SCREW | 4 | S. | 42S5 | | CADMIUM PLATED | |
| 88 | ¼-20X2¼ LG. FIL. HD. M. SCREW | 4 | S. | 42S5 | | CADMIUM PLATED | |
| 89 | CAPACITOR CARRIER PLATE | 2 | SH.S. | 47S11 | IT.#1 | CADMIUM PLATED | 7-D-8537 |
| 90 | CAPACITOR (C-611) | 1 | FOIL PAPER | RE-13A-488C RE-48A-140A | IT.#4 | .5 MFD. WKG.V. 600 | 8-D-2577 |
| 91 | LEAD COMP. | 1 | FIXT. WIRE | 15C1 | ASSY.#2 | AC-2 | 6-D-6791 |
| 92 | .112-40X5/16 LG. RD. HD. M. SCREW | 10 | S | 42S5 | | CADMIUM PLATED | |
| 93 | NAME PLATE (LUBRICATION) | 2 | SH.B. | 42N2 | | #34713 | |
| 94 | NAME PLATE (SERIAL NO.) | 1 | SH.S. | 42N2 | | #36748 | |
| 95 | NAME PLATE (MOTOR) | 1 | ALUM. ALLOY | 42N2 | TDE | #36511 | |
| 96 | 5/16 LOCKWASHER | 4 | MN-SI-CU | 46B27 | 570066 | NON-CORR. | 860077 |
| 97 | CAPACITOR (C-614) | 1 | MICA | RE-13A-383K RE-48A-154F | IT.#11 | .025 MFD. WKG.V. 600 | 8-D-2576 |
| 98 | CAPACITOR (C-612) | 1 | FOIL PAPER | RE-13A-488C RE-48A-140A | IT.#5 | .5 MFD. WKG.V. 600 | 8-D-2577 |
| 99 | CAPACITOR (C-611, C-612) | 1 | FOIL PAPER | RE-13A-488C RE-48A-140A | IT.#6 | .5 MFD. WKG.V. 600 | 8-D-2577 |
| 100 | CAPACITOR (C-613, C-614) | 1 | MICA | RE-13A-383K RE-48A-154F | IT.#12 | .025 MFD. WKG.V. 600 | 8-D-2576 |
| 101 | NAME PLATE (MOTOR | 1 | ALUM. ALLOY | 42N2 | TDE-1 | #40234 | |

FOR EXTENSIONS SEE TABLE ON DWG. #36-J-148

## LIST OF SPARE PARTS AND TOOLS (PER VESSEL)

REPRODUCED FROM MFRS. DRAWING NO. *36-J-146* BUREAU NO. *14RE21J1632A*
NAMES AND NUMBERS OF VESSELS: SEE TITLE BLOCK
APPLICATION: *DRIVING GENERATOR ON TDE & TDE-1 RADIO-TRANSMITTER.* APPLIANCE D.C. MOTOR *ON MOT. GEN.*
NAVY CONTRACT NO. *SEE TITLE BLOCK* MANUFACTURER W. E. & M. CO.
SHIPBUILDER'S ORDER NO. *SEE TITLE BLOCK*

| ITEM NO. | NUMBER OF SETS | NUMBER PER SET | NAME OF PART OR TOOL | CATALOG OR SERIAL ORDERING DATA | MFRS. DRAWING AND PIECE NO. PC. | DWG. NO. | BUREAU DRAWING AND PIECE NUMBER DWG. NO. |
|---|---|---|---|---|---|---|---|
| 1 | 1 | 1 | WOUND ARMATURE COMP. (E-611) | D-7-B-8423 ASSY.#2 | 17 | 36-J-146 | |
| 2 | 1 | 1 | FRONT BALL BEARING (ND-8504) (E-611) | D-7-B-8544 IT.#5 | 39 | 36-J-146 | |
| 3 | 1 | 1 | REAR BALL BEARING (ND-8505) (E-612) | D-7-D-8544 IT.#6 | 40 | 36-J-146 | |
| 4 | 2 | 1 | FIELD COIL SET COMPLETE (E-612) | D-7-B-8464 ASSY.#2 | 7 TO 14 | 36-J-146 | |
| 5 | 1 | 2 | BRUSH HOLDER (E-613) | D-7-B-8461 ASSY.#2 | 41 TO 43 | 36-J-146 | |
| 6 | 10 | 2 | CARBON COMPLETE (E-614) | D-5-D-4201 IT.#2 | 48 | 36-J-146 | |
| 7 | 1 | 2 | BRUSH HOLDER CAP (E-615) | D-1-D-8660 IT.#6 | 49 | 36-J-146 | |
| 8 | 1 | 1 | BRUSH HOLDER (C-4) (E-616) | D-7-B-8432 ASSY.#4 | 44 TO 46 | 36-J-146 | |
| 9 | 1 | 1 | BRUSH HOLDER (C-4) (E-617) | D-7-B-8432 ASSY.#4 | 44 TO 46 | 36-J-146 | |
| 10 | 10 | 2 | CARBON COMPLETE (E-618) | D-4-D-8258 IT.#5 | 47 | 36-J-146 | |
| 11 | 1 | 2 | BRUSH HOLDER CAP (E-619) | D-1-D-8660 IT.#3 | 50 | 36-J-146 | |
| 12 | 1 | 1 | CAPACITOR (C-611, C-612) | D-8-D-2577 IT.#6 | 99 | 36-J-146 | |
| 13 | 1 | 1 | CAPACITOR (C-613, C-614) | D-8-D-2576 IT.#12 | 100 | 36-J-146 | |

*MOTOR* SPARE PARTS S# *957990*
SPARE PARTS FOR USE WITH—*CAY21852*
TYPE "FK" FRAME *D186 SEMI-ENCLOSED*
*1* HP. *5.8* AMP. *230* VOLT.
*3450* RPM., D.C. MOTOR S# *957989*
CASE NO.
GROSS WT. NET WT. *30 LBS.*

LEGEND
S STYLE NUMBER
D DRAWING NUMBER
L ELECTRICAL SPECIFICATION NUMBER
NOTE: SUFFIX LETTERS IN CONNECTION WITH IDENTIFYING NUMBERS FOR SPARE PARTS ARE FOR THE INFORMATION OF THE MANUFACTURER AND WILL NOT AFFECT THE MATERIAL FURNISHED ON FUTURE ORDERS.
WHEN REORDERING ALWAYS REFER TO MACHINE SERIAL NUMBER
NO. OF SHEETS 1 SHEET NO. 1

| NO. | DESCRIPTION | AUTHORITY | APP'D | DATE |
|---|---|---|---|---|
| | | | | |

**WESTINGHOUSE ELECTRIC & MFG. CO.**
**LIMA WORKS, LIMA OHIO, U.S.A.**

DRWG. NO **36-J-146** SHEET *1* OF *1* SHEET
DRAWN BY *C.R.* DATE *8-4-41* INSPECTED BY ____ DATE ____
TRACED BY *C.R.* DATE *"* APPROVED BY ____ DATE ____
SCALE *N.T.S.* REPRODUCTION OF FINAL PLANS MADE ____
—DIMENSIONS IN INCHES—

BU. SHIPS APPROVAL LTR. INM APPROVAL LTR.
DATE INSPECTOR OF NAVAL MATERIAL

OUTLINE & ASSEMBLY (OR SPECIFICATIONS FOR)

*TYPE CAY21852 DC MOTOR*
*1 H.P., 3450 RPM, 230 VOLTS, 5.8 AMPS, D.C.,*
*A UNIT OF MODELS TDE & TDE-1 RADIO EQUIPMENT*

CONTRACT NUMBER *NXs 3179 NXss 20802* CONTRACT DATE *6-30-42 6-1-43*
BUREAU OF SHIPS PLAN NUMBER
*14-RE-21J-1632-A*

CAY-T-160-3—Motor, Type CAY-21852, 230 V. D.C., a Unit of Type CAY-21849 Rectifier Power Unit for Navy Models TDE and TDE-1, Outline, Winding Data and Specifications. (Dwg. 36-J-146)

# DESCRIPTIVE DATA

## (A) IDENTIFICATION

MANUFACTURER— WESTINGHOUSE ELEC. & MFG. CO
MANUFACTURER'S TYPE *FS* CLASS— *A* FRAME NO *186*
NAVY CONTRACT OR SHIPBUILDER'S ORDER— *SEE TITLE BLOCK* DATE
INSTALLED ON— (SEE TITLE BLOCK FOR VESSELS INVOLVED)
FOR DRIVING— *CAY 21854 GENERATOR*
MANUFACTURER OF DRIVEN AUXILIARY— *WESTINGHOUSE ELEC. & MFG. CO.*
REFERENCE SPECIFICATIONS
THE MOTORS DESCRIBED HEREUNDER WILL CONFORM STRICTLY WITH NAVY DEPARTMENT SPECIFICATION 17M10 (INT.) (MOTORS A.C. FOR SHIPBOARD USE) OF SEPT. 15 1940 AND OF THE SPECIFICATIONS FOR THE VESSEL EXCEPT AS SPECIFICALLY ENUMERATED BELOW.
REFERENCE DRAWINGS:
TITLE OF DWG. MANUFACTURER'S NO. BU. SHIPS NO.

## (B) MANUFACTURER'S DESCRIPTIVE DATA

MOTOR CLASSIFICATION
DEGREE OF ENCLOSURE— *SEMI-ENCL.*
METHOD OF COOLING— *NATURAL-VENTILATED*
SPEED CLASS— *CONSTANT* DUTY CLASSIFICATION— *CONTINUOUS*
VOLTAGE— *220/440* FREQUENCY— *60* CYCLES— NUMBER OF PHASES— *3*
TYPE *3 PHASE AC* SQ. CAGE IND.—RPM (SYN.) *3600* (F.L.) *3450*
TORQUE CLASSIFICATION— *NORMAL* NO. OF POLES— *2*
CURRENT CLASSIFICATION— *NORMAL STARTING CURRENT*
AMBIENT TEMP.— *40* °C. CLASS OF INSULATION— *A*
TEMPERATURE RISE. TABLE #1 METHOD #1 & #2 CONCURRENTLY
MOUNTING (HORIZONTAL OR VERTICAL)— *HORIZONTAL*
TYPE OF ELECTRIC BRAKE AND TORQUE RATING— *NONE*
MOTOR RATING
HORSEPOWER *1*

$$\text{FORMULA H.P.} = \frac{(\quad)\times\left(1.05+\frac{1.35}{(\quad)+3}\right)}{(\quad)} = \text{H.P.}$$

LOAD LIMIT H.P. =
NOTE—ABOVE FORMULA IS BASED ON CHARACTERISTIC CURVES OF DRIVEN AUXILIARY SHOWN ON PLAN.— BU. SHIPS NO.

PERFORMANCE

| | (440 VOLTS) AMPERES | EFFICIENCY | POWER FACTOR |
|---|---|---|---|
| (A) LOCKED ROTOR (STG. COND.) | 10.5 | 0 | |
| (B) GUARANTEED 4/4 | 1.50 | 74 | 83 |
| (C) GUARANTEED 3/4 | 1.29 | 73 | 78 |
| (D) GUARANTEED 1/2 | 1.00 | 71 | 69 |
| (E) 1/4 | | | |
| (F) NO LOAD (IDLING) | | | |

(G) STARTING TORQUE—NOT LESS THAN 300 % FULL LOAD TORQUE
(H) PULLOUT TORQUE —NOT LESS THAN 300 % FULL LOAD TORQUE
SPECIAL ATTACHMENTS: *NONE*

WEIGHTS
(A) MOTOR COMPLETE— *54* LBS. (B) ROTOR COMPLETE— *8* LBS.
(C) ALL SPARES BOXED, INCLUDING CONTROL SPARES— LBS.
SHAFT, BEARINGS & LUBRICATION
(A) SHAFT MATERIAL— *COLD DRAWN CARBON STEEL* (B) TYPE OF BEARINGS—BALL
(C) BALL BEARING IDENTIFICATION
NAVY—TYPE A CLASS *a* GRADE II MANUFACTURER'S *SAE #204 & #205 SINGLE SEAL*
(D) TYPE OF LUBRICATION—GREASE NAVY SYMBOL—14-L-3 GRADE "B"
(E) BEARINGS SHOWN ARE APPROVED BY BALL BEARING MANUFACTURER AS REQUIRED BY PAR. 7 (c), APPENDIX I OF NAVY SPEC. 42-B-5.
(BEARING MANUFACTURER'S SIGNATURE)
STATOR CORE
(A) DIAM. (INSIDE)— *4000* (B) CORE LENGTH— *1 3/4* IN. (C) AIR GAP— *SINGLE .017*
ROTOR CORE
(A) DIAM. (OUTSIDE)— *3.966* (B) NO. OF BARS— *36*
(C) MATERIAL OF BARS— *.162 DIA. COPPER BAR* (D) SIZE OF END RING— *2.593 I.D. 3.966 O.D.*
(E) MATERIAL OF END RING— *.185 THICK COPPER* (F) CONSTRUCTION— *SKEWED*
EXCEPTIONS TO NAVY SPECIFICATIONS:
AS PER SECTION (A) ABOVE EXCEPT: *SEE NEXT COLUMN.*

## (C) TYPE TESTS

TO BE MADE ONLY ON SELECTED MOTORS. REFER TO SPECIFICATION 17-M-10
EFFECTIVENESS OF ENCLOSURE *O.K.*

EFFICIENCY
I SQUARED R LOSSES IN WINDINGS *41.5*
BEARING FRICTION AND WINDAGE *71.5*
CORE LOSSES *106*
CALCULATED EFFICIENCY AT 1/2 LOAD *70.5%*
3/4 LOAD *75.5%*
4/4 LOAD *77.6%*

| MOTOR TORQUE | | | | | |
|---|---|---|---|---|---|
| STATIONARY | | | PULL OUT | | |
| VOLTS | AMPS | FT. LB. | VOLTS | AMPS. | FT. LBS. |
| 220 | 19.6 | 5.70 | | | |

HEATING:

NORMAL LOAD HEAT RUN

| TIME | LINE VOLTS | STATOR AMPERES A | B | C | NO. 1 | NO. 2 | NO. 3 | NO. 4 | NO. 5 | NO. 6 | ROOM |
|---|---|---|---|---|---|---|---|---|---|---|---|
| 10:00 | | | | | 25 | | 26 | | 25 | | 26 |
| 10:30 | | | | | 43 | | 32 | | 36 | | 26 |
| 11:00 | | | | | 48 | | 35 | | 42 | | 25 |
| 11:30 | | | | | 51 | | 37 | | 48 | | 25 |
| 12:00 | | | | | 54 | | 38 | | 51 | | 25 |
| 12:30 | | | | | 55 | | 39 | | 53 | | 25 |
| 1:00 | | | | | 56 | | 39 | | 53 | | 25 |
| 1:30 | 220 | 2.95 AV. | | | 56 | | 39 | | 53 | | 26 |
| TEMP. RISE DEGREES C. WHILE RUNNING | | | | | 30 | | 14 | | 28 | | |
| TEMP. RISE DEGREES C. AFTER SHUT DOWN | | | | | 33 | | 14 | | 29 | | |

(Temperatures by thermometers* °C)

*LOCATION OF THE NUMBERED THERMOMETERS IN THE TABLE (NORMAL LOAD HEAT RUN) ABOVE SHOULD BE INDICATED
NO. 1 *FLD.* NO. 2 NO. 3 *BRG.* NO. 4 NO. 5 *FRAME* NO. 6

POWER FACTOR:

| % LOAD | FIELD AMPS. (SYN. MOTOR) | STATOR AMPERES A | B | C | FRE-QUENCY | WATTS | POWER FACTOR | R.P.M. |
|---|---|---|---|---|---|---|---|---|
| 1/2 | | 2.01 AV. | | | 60 | 530 | 70.6 | |
| 3/4 | | 2.45 AV. | | | 60 | 760 | 81.0 | |
| 4/4 | | 2.95 AV. | | | 60 | 980 | 84.2 | |
| 5/4 | | 3.60 AV. | | | 60 | 1280 | 83.3 | |

(INSPECTOR'S SIGNATURE)
(OFFICE) DATE

## (D) CONCLUSION

IN VIEW OF THE TEST DATA SHOWN ABOVE AND THE SATISFACTORY HORSEPOWER CAPACITY, SPEED CHARACTERISTICS, POWER FACTORS AND EFFICIENCIES WHEN DRIVING THE CONNECTED AUXILIARY THROUGHOUT ITS RANGE OF SPECIFIED OPERATING CONDITIONS, AS REPORTED BY I. N. M. ____ LETTER ____ OF ____ 194__. THE MOTORS ARE CONSIDERED AS MEETING SPECIFICATION AND CONTRACT REQUIREMENTS AND SUITABLE FOR THE PURPOSE INTENDED EXCEPT ____

(INSPECTOR'S SIGNATURE)
(OFFICE) DATE

— NOTES —

#1. NAVY DEPARTMENT MATERIAL SPECIFICATIONS OF ISSUE IN EFFECT SEPT. 15, 1940 ARE APPLICABLE (17M10 INT.)
#2. THIS MATERIAL IS EQUIVALENT TO COMMERCIAL GRADE KNOWN AS — "FIELD GRADE ELECTRICAL STEEL."
#3. A MIXTURE OF SHELLAC AND GUMS IN ALCOHOL WITH A PLASTICIZER AND LOADED WITH RED IRON OXIDE. (WESTINGHOUSE #672-1)
#4. #10 THREADS (.190 DIA., 32 THDS. PER INCH) TO BE IN ACCORDANCE WITH NATIONAL FINE THREAD SERIES PER 17M10 INT., PAR. C-5b(2). ALL OTHER THDS. TO BE IN ACCORDANCE WITH NATIONAL COARSE THD. SERIES PER 17M10 INT., PAR. C-5b(1) UNLESS OTHERWISE SPECIFIED.
#5. CADMIUM PLATING TO BE IN ACCORDANCE WITH NAVY DEPT. SPEC. 46P1.
#6. ALL METAL SURFACES INSIDE OF MOTOR PROTECTED WITH A COAT OF ZINC CHROMATE PRIMER. (WESTINGHOUSE #212-T)(NAVY AERO. SPEC. P27-b)
#7. THIS CUP WILL MEET NAVY SPEC. 45C7, TYPE D, EXCEPT CUP WILL BE MADE OF STEEL AND CADMIUM PLATED PER NAVY SPEC. 46P1 IN LINE WITH CHIEF OF BU. SHIPS LETTER S63-1(3660) EN28/A2-11 DATED 2-7-42. THIS CUP IS CATALOGUE STYLE # GH-7403 SIZE 000, AMERICAN STAMPING CO., BATTLE CREEK, MICHIGAN.

— EXCEPTIONS TO NAVY SPECIFICATIONS —

#1. ROTOR CORE CANNOT BE REMOVED AND REPLACED ON KNURLED SHAFT WITHOUT DESTROYING CONCENTRICITY.
#2. PREHEATING OF COMPLETED STATOR, BEFORE VARNISH DIPPING, IS OMITTED.
#3. WESTINGHOUSE #7669-1 VARNISH HEAT ENDURANCE TEST IS 250 HOURS. (GRADE BB VARNISH NAVY SPEC. 52 V 13 REQUIRES 500 HOURS.)
#4.
#6. E-Sh. BEARINGS ARE SINGLE SEALED WITH NO SUPPLEMENTARY HOUSING SHIELD. A ROTATING GREASE FLINGER IS ASSEMBLED ON THE SHAFT ADJACENT TO THE BEARING.

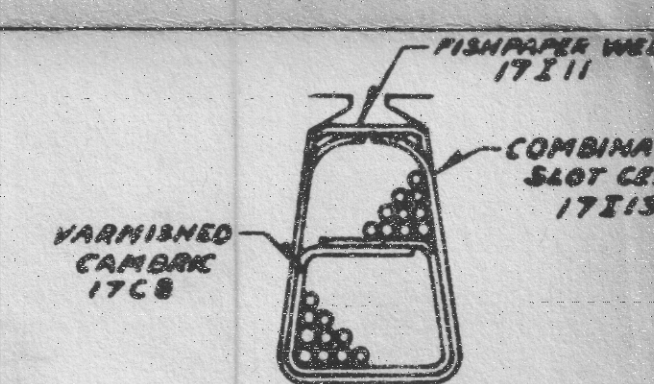

ENLARGED CROSS-SECTION OF A STATOR SLOT

STATOR WINDING DATA

| | |
|---|---|
| NUMBER OF POLES | 2 |
| TYPE OF CONNECTION | SERIES-PARALLEL STAR |
| NUMBER OF SLOTS | 24 |
| NUMBER OF COILS | 24 |
| GROUPING OF COILS | 6 |
| WINDING PITCH IN SLOTS | 1-8 |
| TURNS IN SERIES PER COIL | 55 |
| CONDUCTOR DIAMETER | .0285 |
| CONDUCTOR INSULATION | SINGLE COTTON COVERED WIRE & COTTON TAPE |
| RES. BETWEEN TERM. OHMS AT 25° C. | 16-SERIES CONNECTION |
| WEIGHT OF COPPER—LBS. | 4.75 |

TREATMENT OF COMPLETE STATOR

THE COMPLETELY WOUND STATOR IS GIVEN FOUR TREATMENTS IN BAKING VARNISH AS FOLLOWS:
1. DIPPING IN WESTINGHOUSE VARNISH #7669-1 FOR 1 HOUR.
2. DRAINING FOR 2 HOURS UNTIL DRIPPING CEASES.
3. BAKING IN AN OVEN AT 140° TO 150° CENTIGRADE FOR 5 HOURS.
4. ITEMS 1, 2, & 3 ARE THEN REPEATED UNTIL FOUR COATS OF VARNISH HAVE BEEN APPLIED.

INSULATION MATERIAL

| | MATERIAL | NAVY SPEC. |
|---|---|---|
| COMBINATION SLOT CELL | FISH PAPER & TR. CLOTH | 17I13 |
| COIL SEPARATOR CELL | VARNISHED CAMBRIC | 17C8 |
| TOP WEDGE | FISHPAPER | 17I11 |
| INSULATION BETWEEN PHASES | VARNISHED CAMBRIC | 17C8 |
| INSUL. ON COIL EXTENSIONS | COTTON TAPE | 17T15 |
| INSULATION ON COIL LEADS | COTTON SLEEVING | 17S10 |
| COMPLETED STATOR | VARNISH | |

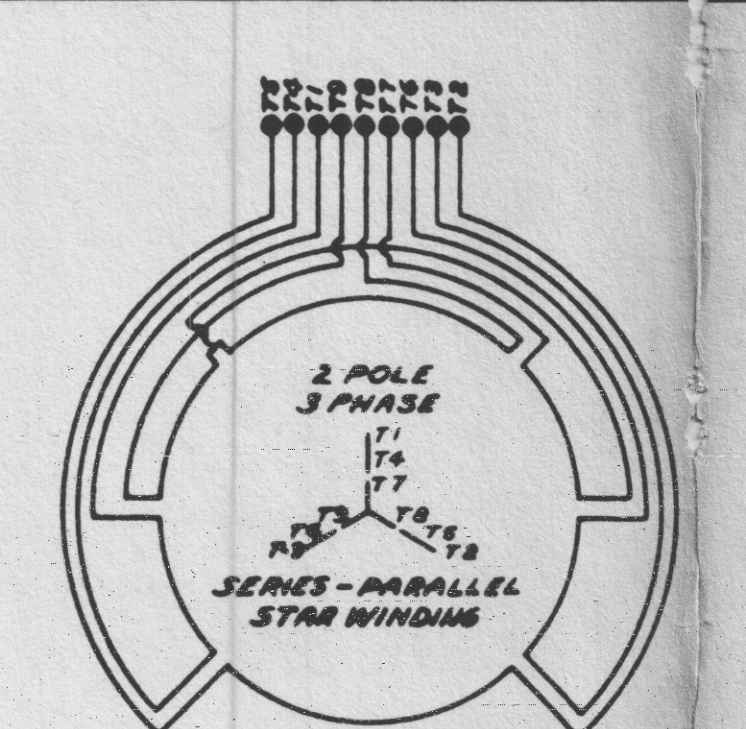


| HIGH VOLTAGE | | | | LOW VOLTAGE | | |
|---|---|---|---|---|---|---|
| CONNECT | T4 TO T7 | T5 TO T8 | T6 TO T9 | T1 TO T7 | T2 TO T8 | T3 TO T9 |
| USE FOR LEADS | T1-T2-T3 | | | 1ST LEAD | 2ND LEAD | 3RD LEAD |
| | | | | SHORT CIRCUIT T4-T5-T6 | | |

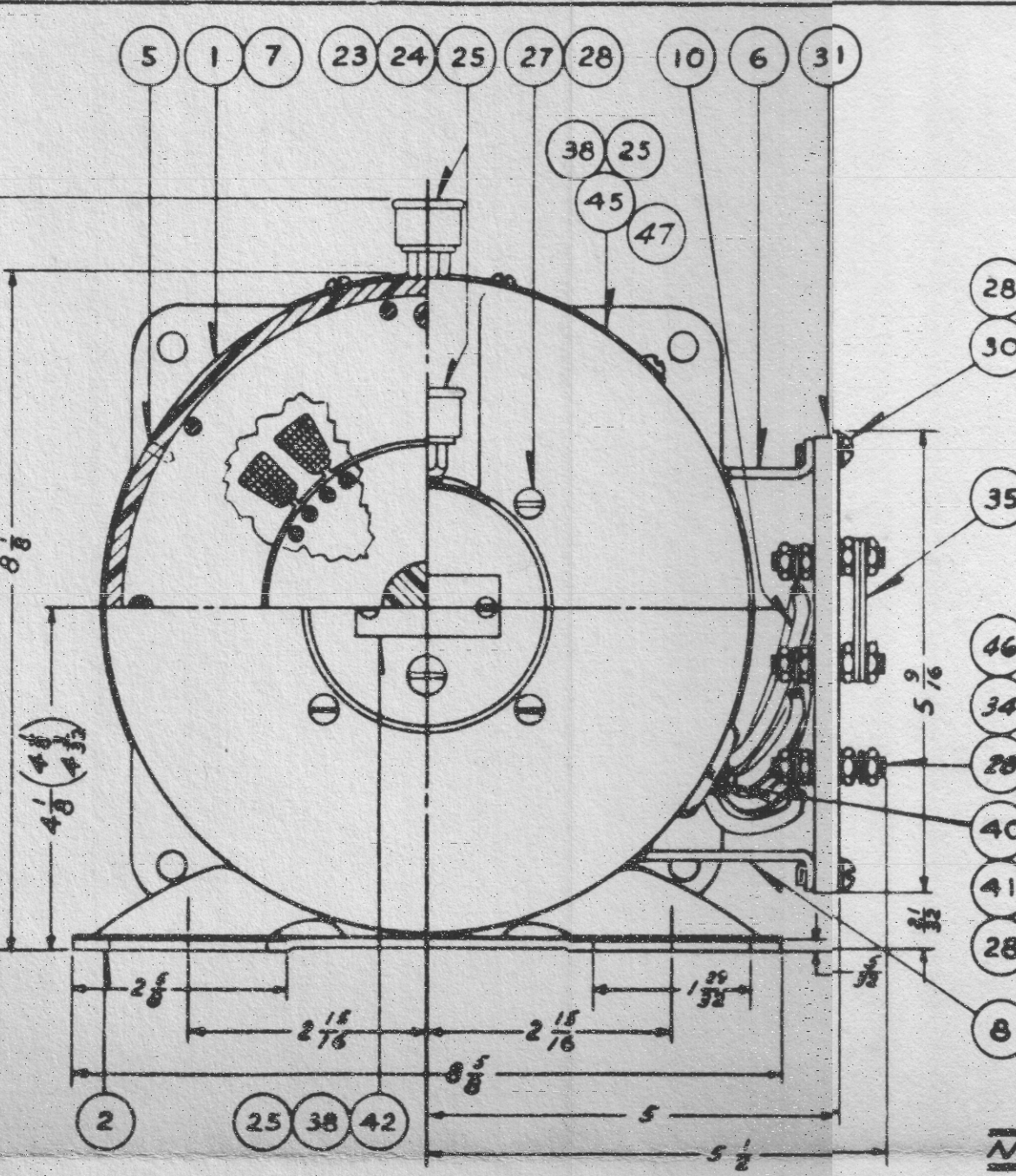

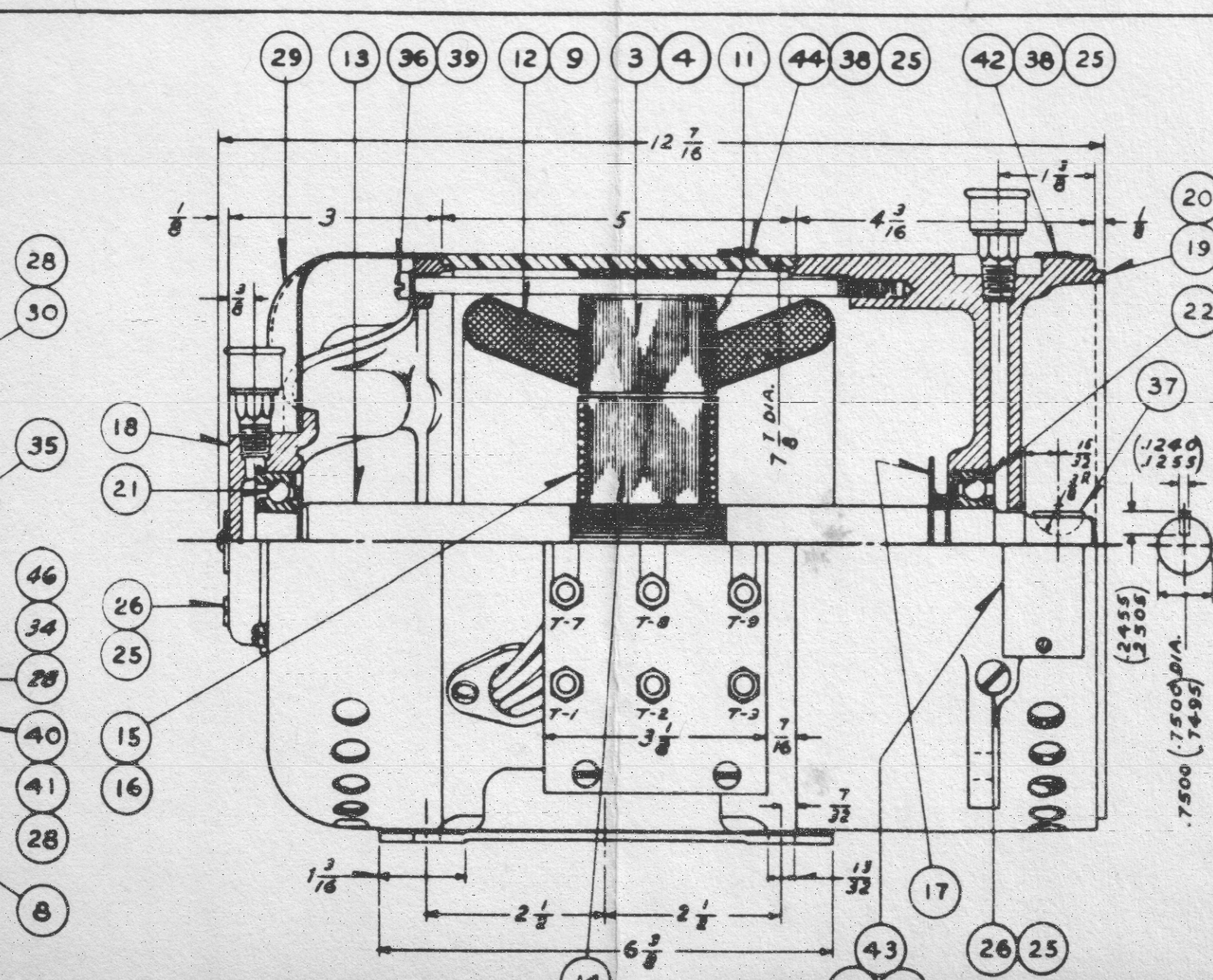

NOT TO SCALE

FOR COUPLING DATA SEE DWG. 36-J-142.

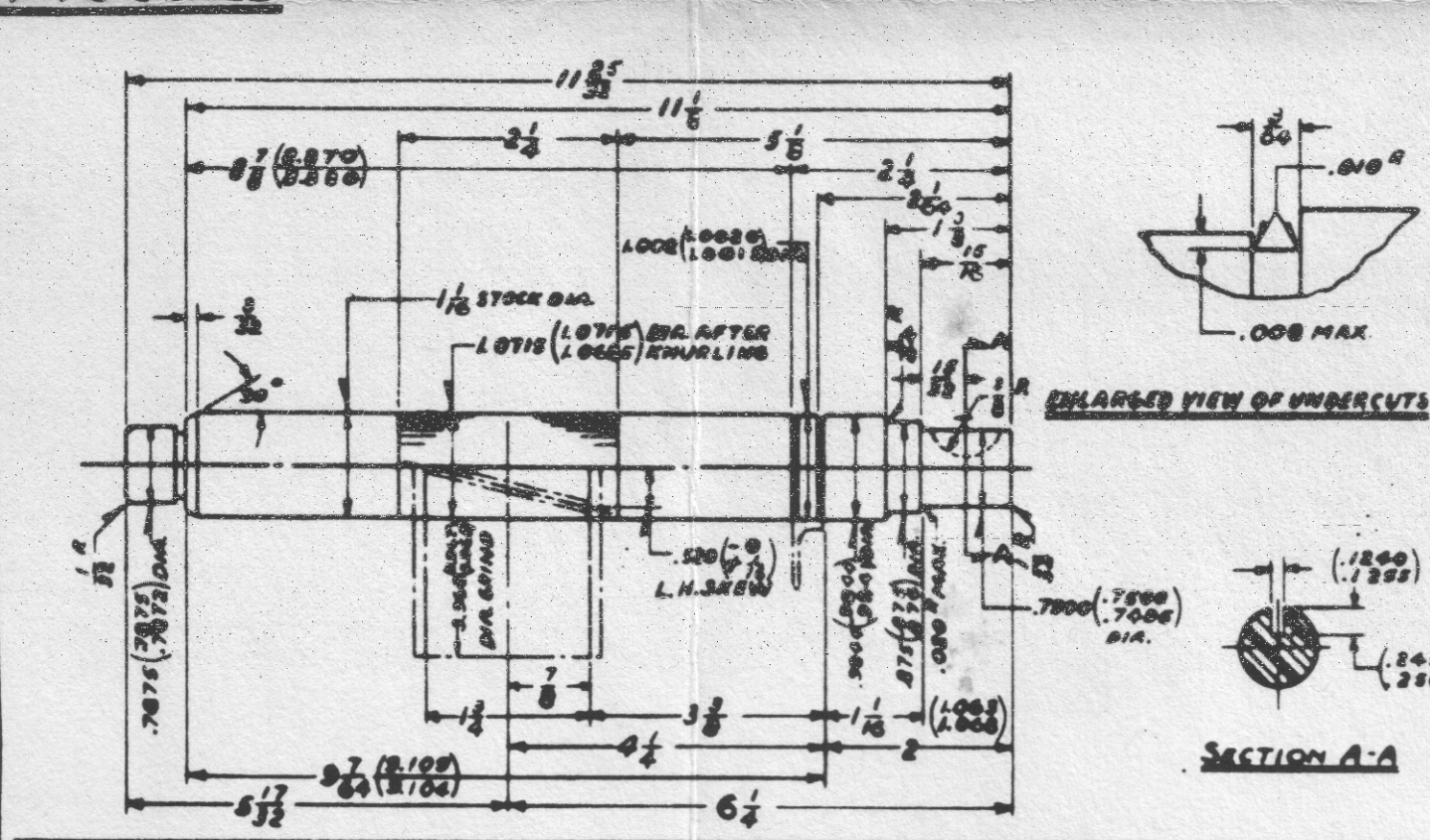


LIST OF MATERIAL

QUANTITIES ARE FOR ONE MACHINE

| PIECE NO. | NAME OF PIECE | NO. REQ'D | MAT'L | NAVY SPEC. LATEST ISSUE | STYLE NO. | REMARKS | CONTRACTORS DRAWING NO. |
|---|---|---|---|---|---|---|---|
| 1 | FRAME | 1 | SH.S. | 47S11 | 858212 | REF. ASSY 1-C-9032 | 52-B-343 |
| 2 | FOOT | 1 | SH.S. | 47S11 | 987885 | | 59-B-640 |
| 3 | PRIMARY PUNCHING | 1 SET | ELEC. SH.S. | NOTE #2 | 1187805 | 12.08 LBS. | 5-B-1620 |
| 4 | RIVET | 8 | S. | 46S17 | 186708 | | 306119 |
| 5 | PIN | 2 | S. | 46S17 | 416711 | | 332116 |
| 6 | TERMINAL BOARD BRACKET | 1 | SH.S. | 47S11 | IT.#2 | TOP | 1-C-9033 |
| 7 | PIN | 1 | S. | 46S17 | IT.#3 | | 32-D-402 |
| 8 | TERMINAL BOARD BRACKET | 1 | SH.S. | 47S11 | IT.#1 | BOTTOM | 1-C-9033 |
| 9 | STATOR INSULATION MATERIAL | 1 | SEE INS. MAT'L | | GROUP #2 | | 87-D-957 |
| 10 | LEAD | 1 | FIXT. WIRE | 15C1 | GROUP #1 | 9 LEADS* | 1-C-9047 |
| 11 | STATOR INSULATING P'CHG. | 2 | FIBRE | 17F5 | 848451 | | 37-B-640 |
| 12 | STATOR COIL | 24 | S.C.C. EN. COP. WIRE | 15W2 | IT.#1 | 4.75 LBS. | L-383350 |
| 13 | SHAFT | 1 | S. BAR | 44-S-671 73-X1 [illegible] | IT.#1 | REF. ASSY 7-B-8442 | 7-B-8442 |
| 14 | ROTOR PUNCHING | 1 SET | ELEC. SH.S. | NOTE #2 | 1187848 | 4.26 LBS. | 95-C-557 |
| 15 | RESISTANCE RING | 2 | COPPER | 47C2 | 1127617 | | 47-B-514 |
| 16 | CONDUCTOR | 36 | COPPER | 47C2 | IT.#25 | | 831233 |
| 17 | OIL FLINGER | 1 | S. | 46S17 | IT.#1 | | 6-D-6785 |
| 18 | FRONT BRACKET | 1 | M.I. | 46I8 TYPE B | IT.#2 | NOT GALVANIZED | 7-A-5635 |
| 19 | REAR BRACKET | 1 | M.I. | 46I8 TYPE B | IT.#1 | NOT GALVANIZED | 7-A-5636 |
| 20 | PIN | 1 | S. | 46S17 | IT.#3 | | 32-D-402 |
| 21 | FRONT BALL BEARING | 1 | S. | 42B5 | IT.#5 | #204 SINGLE SEAL | 7-D-8544 |
| 22 | REAR BALL BEARING | 1 | S. | 42B5 | IT.#6 | #205 SINGLE SEAL | 7-D-8544 |
| 23 | GREASE CUP | 2 | S. | NOTE #7 | IT.#1 | CADMIUM PLATED | 6-D-6415 |
| 24 | BALL BEARING GREASE | 1 SET | GREASE | ML3 GRADE B | | #7754-2 | |
| 25 | CEMENT | 1 SET | ENAMEL | NOTE #3 | | #672-1 | |
| 26 | 1/8 IN. PIPE PLUG | 2 | S. | 46S17 | 652874 | CADMIUM PLATED | 816483 |
| 27 | .190-32X1/2 LG. FIL. HD. M. SCREW | 4 | S. | 42S5 | | CADMIUM PLATED | |
| 28 | .190 SHAKEPROOF LOCKWASHER | 46 | S. | AC-936 A10 | IT.#5 | CADMIUM OR ZINC PLATED | 5-D-4150 |
| 29 | END COVER | 1 | S. | 47S11 | IT.#1 | | 7-B-8426 |
| 30 | .190-32X1/2 LG. RD. HD. M. SCREW | 4 | S. | 42S5 | | CADMIUM PLATED | |
| 31 | TERMINAL BOARD | 1 | MICARTA | 17P5 | IT.#1 | REF. ASSY 7-B-8440 | 7-B-8440 |
| 32 | | | | | | | |
| 33 | | | | | | | |
| 34 | .190-32 HEX. M. SCR. NUT | 36 | B. | 43B11 | | NICKEL PLATED | |
| 35 | LINK | 5 | B. | 47B2 | IT.#3 | NICKEL PLATED | 1-C-9033 |
| 36 | 1/4 LOCK WASHER | 4 | PH.S.H. | 46B27 | 570065 | NON-CORR. | 860077 |
| 37 | WOODRUFF KEY | 1 | S. | #406 | | | |
| 38 | .112-40X1/4 LG. RD. HD. M. SCREW | 12 | S. | 42S5 | | CADMIUM PLATED | |
| 39 | 1/4-20X5/8 LG. FIL. HD. SCREW | 4 | S. | 43B11 | IT.#19 | CADMIUM PLATED | 816121 |
| 40 | .190-32X1/4 LG. RD. HD. M. SCREW | 2 | S. | 42S5 | | CADMIUM PLATED | |
| 41 | LEAD BUSHING | 1 | MOLDARTA | 17P4 | IT.#1 | | 7-D-8526 |
| 42 | NAME PLATE (LUBRICATION) | 2 | SH.B. | 42N2 | | #34713 | |
| 43 | NAME PLATE (CONNECTION) | 1 | SH.B. | 42N2 | | #34714 | |
| 44 | NAME PLATE (SERIAL NO.) | 1 | SH.S. | 42N2 | | #36748 | |
| 45 | NAME PLATE (MOTOR) | 1 | ALUM. ALLOY | 42N2 | TDE | #36530 | |
| 46 | STUD (1 1/4 LG.) .190-32 | 9 | B | 43B11 | 361701 | NICKEL PLATED | 801912 |
| 47 | NAME PLATE (MOTOR) | 1 | ALUM. ALLOY | 42N2 | TDE-1 | #40242 | |
| 48 | | | | | | | |
| 49 | | | | | | | |
| 50 | | | | | | | |
| 51 | | | | | | | |
| 52 | | | | | | | |
| 53 | | | | | | | |
| 54 | | | | | | | |
| 55 | | | | | | | |
| 56 | | | | | | | |
| 57 | | | | | | | |
| 58 | | | | | | | |
| 59 | | | | | | | |
| 60 | | | | | | | |

* LEADS TAGGED T1-T2-T3-T4-T5-T6-T7-T8-T9

LIST OF SPARE PARTS AND TOOLS (PER VESSEL)
REPRODUCED FROM MFRS. DRAWING NO. 36-J-140 BUREAU NO. 14RE21J1630A
NAMES AND NUMBERS OF VESSELS: SEE TITLE BLOCK
APPLICATION *DRIVING GENERATOR ON TDE & TDE-1 RADIO TRANSMITTER*
NAVY CONTRACT NO. *SEE TITLE BLOCK* APPLIANCE—A. C. MOTOR *ON MOT.-GEN.*
SHIPBUILDER'S ORDER NO. *SEE TITLE BLOCK* MANUFACTURER W. E. & M. CO

| ITEM NO. | NUMBER OF SETS | NUMBER PER SET | NAME OF PART OR TOOL | CATALOG OR SERIAL ORDERING DATA | MFRS. DRAWING AND PIECE NUMBER PC. | DWG. NO. | BUREAU DRAWING AND PIECE NO. DWG. NO. |
|---|---|---|---|---|---|---|---|
| 1 | 1 | 1 | FRONT BALL BEARING NO. 8504 (O-621) | D-7-D-8544 IT.#5 | 21 | 36-J-140 | |
| 2 | 1 | 1 | REAR BALL BEARING NO. 8505 (O-622) | D-7-D-8544 IT.#6 | 22 | 36-J-140 | |

*MOTOR* SPARE PARTS S. # *957986*
SPARE PARTS FOR USE WITH— *CAY 21853*
TYPE *FS*. FRAME # *186 SEMI-ENCLOSED*
*1* H.P. *3* PHASE *60* CYCLE *220/440* VOLT.
*3450* RPM., A.C. MOTOR S. # *957986*
CASE NO.
GROSS WT. NET WT. *1 LB.*

LEGEND—
S—STYLE NUMBER
D—DRAWING NUMBER
L—ELECTRICAL SPECIFICATION NUMBER
NOTE: — SUFFIX LETTERS IN CONNECTION WITH IDENTIFYING NUMBERS FOR SPARE PARTS ARE FOR THE INFORMATION OF THE MANUFACTURER AND WILL NOT AFFECT THE MATERIAL FURNISHED ON FUTURE ORDERS.
WHEN REORDERING ALWAYS REFER TO MACHINE SERIAL NUMBER
NO. OF SHEETS 1 SHEET NO. 1

FOR EXTENSIONS SEE TABLE ON DWG. #36-J-142

| NO. | DESCRIPTION | AUTHORITY | APP'D. | DATE |
|---|---|---|---|---|

ALTERATIONS

**WESTINGHOUSE ELECTRIC & MFG. CO.**
**LIMA WORKS, LIMA OHIO, U.S.A.**

DRWG. NO. 36-J-140 SHEET 1 OF 1 SHEETS
DRAWN BY: *C.R.* DATE: *8-10-44* INSPECTED BY ____ DATE ____
TRACED BY: *C.R.* DATE: *"* APPROVED BY ____ DATE ____
SCALE *N.T.S.* REPRODUCTION OF FINAL PLANS MADE ____
DIMENSIONS IN INCHES

PLAN EXAMINED & FOUND SATISFACTORY

BU. SHIPS APPROVAL LTR. INM APPROVAL LTR.
DATE INSPECTOR OF NAVAL MATERIAL

OUTLINE & ASSEMBLY (OR SPECIFICATIONS FOR)

*TYPE CAY 21853 A C MOTOR*
*1 H.P., 3450 RPM, 220/440 VOLTS, 3/1.5 AMPS, 60 CYC., 3 PH.*

*A UNIT OF MODELS TDE & TDE-1 RADIO EQUIPMENT*

CONTRACT NUMBER: *NXs 3179 / NXss 20802* CONTRACT DATE: *6-30-42 / 6-1-43*

BUREAU OF SHIPS PLAN NUMBER
14-RE-21-J-1630-A

CAY-T-160-4—Motor, Type CAY-21853, 220/440 V. 3 Phase, 60 Cycle, a Unit of Type CAY-21850 Rectifier Power Unit for Navy Models TDE and TDE-1. Outline, Winding Data and Specifications. (Dwg. 36-J-140)

## DESCRIPTIVE DATA

### (A) IDENTIFICATION

MANUFACTURER—WESTINGHOUSE ELEC. & MFG. CO.
MANUFACTURER'S TYPE FJ CLASS— A FRAME NO. 186
NAVY CONTRACT OR SHIPBUILDER'S ORDER—SEE TITLE BLOCK DATE
INSTALLED ON—(SEE TITLE BLOCK FOR VESSELS INVOLVED)
FOR DRIVING— CAY 21854 GENERATOR
MANUFACTURER OF DRIVEN AUXILIARY—WESTINGHOUSE ELEC. & MFG. CO.
REFERENCE SPECIFICATIONS
THE MOTORS DESCRIBED HEREUNDER WILL CONFORM STRICTLY WITH NAVY DEPARTMENT SPECIFICATION 17M10 (INT.) (MOTORS A.C. FOR SHIPBOARD USE) OF SEPT. 15, 1940 AND OF THE SPECIFICATIONS FOR THE VESSEL. EXCEPT AS SPECIFICALLY ENUMERATED BELOW.

| REFERENCE DRAWINGS: TITLE OF DWG. | MANUFACTURER'S NO. | BU. SHIPS NO. |
|---|---|---|
| | | |

### (B) MANUFACTURER'S DESCRIPTIVE DATA

MOTOR CLASSIFICATION
DEGREE OF ENCLOSURE— SEMI-ENCLOSED
METHOD OF COOLING— NATURAL-VENTILATED
SPEED CLASS— CONSTANT DUTY CLASSIFICATION— CONTINUOUS
VOLTAGE— 115/230 FREQUENCY— 60 CYCLES— NUMBER OF PHASES— 1
TYPES PHASE A.C.SQ. CAGE IND.—RPM (SYN.) 3600 (F.L.) 3450
TORQUE CLASSIFICATION— NORMAL NO. OF POLES— 2
CURRENT CLASSIFICATION— NORMAL STARTING CURRENT
AMBIENT TEMP.— 40 °C. CLASS OF INSULATION— A
TEMPERATURE RISE, TABLE #1 METHOD #1 & #2 CONCURRENTLY
MOUNTING (HORIZONTAL OR VERTICAL)— HORIZONTAL
TYPE OF ELECTRIC BRAKE AND TORQUE RATING— NONE
MOTOR RATING
HORSEPOWER 1

FORMULA H.P. = ( ) × (1.05 + 1.35 / (( ) + 3)) / ( ) = H.P.

LOAD LIMIT H.P. =
NOTE—ABOVE FORMULA IS BASED ON CHARACTERISTIC CURVES OF DRIVEN AUXILIARY SHOWN ON PLAN— BU. SHIPS NO.

| PERFORMANCE (230 VOLTS) | AMPERES | EFFICIENCY | POWER FACTOR |
|---|---|---|---|
| (A) LOCKED ROTOR (STG. COND.) | 37. | 0 | |
| (B) GUARANTEED 4/4 | 5.63 | 74 | 75 |
| (C) GUARANTEED 3/4 | 4.97 | 73 | 66 |
| (D) GUARANTEED 1/2 | 4.18 | 68 | 57 |
| (E) 1/4 | | | |
| (F) NO LOAD (IDLING) | | | |

(G) STARTING TORQUE—NOT LESS THAN 200 % FULL LOAD TORQUE
(H) PULLOUT TORQUE —NOT LESS THAN 260 % FULL LOAD TORQUE
SPECIAL ATTACHMENTS: NONE

WEIGHTS
(A) MOTOR COMPLETE— 68 LBS. (B) ROTOR COMPLETE— 11.3LBS.
(C) ALL SPARES BOXED, INCLUDING CONTROL SPARES— LBS.
SHAFT, BEARINGS & LUBRICATION
(A) SHAFT MATERIAL—COLD DRAWN CARBON STL. (B) TYPE OF BEARINGS—BALL
(C) BALL BEARING IDENTIFICATION SAE #204 & #205
NAVY—TYPE A CLASS 4 GRADE II MANUFACTURER'S SINGLE SEAL
(D) TYPE OF LUBRICATION—GREASE NAVY SYMBOL—14-L-3 GRADE "B"
(E) BEARINGS SHOWN ARE APPROVED BY BALL BEARING MANUFACTURER AS REQUIRED BY PAR. 7 (c), APPENDIX I OF NAVY SPEC. 42-B-5.
(BEARING MANUFACTURER'S SIGNATURE)
STATOR CORE
(A) DIAM. (INSIDE)— 4.000 (B) CORE LENGTH— 3 IN. (C) AIR GAP— .017 SINGLE
ROTOR CORE
(A) DIAM. (OUTSIDE)— 3.966 (B) NO. OF BARS— 36 2.312 I.D.
(C) MATERIAL OF BARS— .162 DIA. COPPER (D) SIZE OF END RING 3.266 O.D.
(E) MATERIAL OF END RING— .1875TK. COPPER (F) CONSTRUCTION— SKEWED
EXCEPTIONS TO NAVY SPECIFICATIONS:
AS PER SECTION (A) ABOVE EXCEPT: SEE NEXT COLUMN.
CAPACITORS

| PIECE NOS. | NAVY SYMBOL NO. | MANUFACTURER | MFGR'S DESIGNATION |
|---|---|---|---|
| 59 | C-641 | CORNELL DUBILIER | ETB 10013 |

### (C) TYPE TESTS

TO BE MADE ONLY ON SELECTED MOTORS. REFER TO SPECIFICATION 17-M-10
EFFECTIVENESS OF ENCLOSURE OK.

EFFICIENCY
I SQUARED R LOSSES IN WINDINGS 39.0
BEARING FRICTION AND WINDAGE 71.5
CORE LOSSES 110.6
CALCULATED EFFICIENCY AT 1/2 LOAD 73%
3/4 LOAD 76%
4/4 LOAD 77%

| MOTOR TORQUE: STATIONARY VOLTS | AMPS | FT. LB. | PULL OUT VOLTS | AMPS. | FT. LBS. |
|---|---|---|---|---|---|
| 115 | 73 | 3.9 | | | |

HEATING:

NORMAL LOAD HEAT RUN

| TIME | LINE VOLTS | STATOR AMPERES A | B | C | NO. 1 | NO. 2 | NO. 3 | NO. 4 | NO. 5 | NO. 6 | ROOM |
|---|---|---|---|---|---|---|---|---|---|---|---|
| 1:00 | | | | | 28 | | 28 | | 28 | | 28 |
| 1:30 | | | | | 37 | | 33 | | 36 | | 29 |
| 2:00 | | | | | 40 | | 34 | | 41 | | 28 |
| 2:30 | | | | | 42 | | 34 | | 42 | | 27 |
| 3:00 | | | | | 43 | | 35 | | 43 | | 25 |
| 3:30 | | | | | 43 | | 36 | | 44 | | 26 |
| 4:00 | 115 | 9.8 AV | | | 44 | | 37 | | 46 | | 27 |
| TEMP. RISE DEGREES C. WHILE RUNNING | | | | | 17 | | 10 | | 18 | | |
| TEMP. RISE DEGREES C. AFTER SHUT DOWN | | | | | 19 | | 17 | | 19 | | |

*LOCATION OF THE NUMBERED THERMOMETERS IN THE TABLE (NORMAL LOAD HEAT RUN) ABOVE SHOULD BE INDICATED:
NO. 1 BRG. NO. 2 NO. 3 WDG. NO. 4 NO. 5 FRAME NO. 6

POWER FACTOR:

| % LOAD | FIELD AMPS. (SYN. MOTOR) | STATOR AMPERES A | B | C | FRE-QUENCY | WATTS | POWER FACTOR | R.P.M. |
|---|---|---|---|---|---|---|---|---|
| 1/2 | | 6.9 | AV. | | 60 | 530 | 63% | |
| 3/4 | | 8.3 | AV. | | 60 | 750 | 77% | |
| 4/4 | | 9.8 | AV. | | 60 | 990 | 86% | |
| 5/4 | | 11.7 | AV. | | 60 | 1210 | 90% | |

(INSPECTOR'S SIGNATURE)
(OFFICE) DATE

### (D) CONCLUSION

IN VIEW OF THE TEST DATA SHOWN ABOVE AND THE SATISFACTORY HORSEPOWER CAPACITY, SPEED CHARACTERISTICS, POWER FACTORS AND EFFICIENCIES WHEN DRIVING THE CONNECTED AUXILIARY THROUGHOUT ITS RANGE OF SPECIFIED OPERATING CONDITIONS, AS REPORTED BY I. N. M. LETTER OF 194 THE MOTORS ARE CONSIDERED AS MEETING SPECIFICATION AND CONTRACT REQUIREMENTS AND SUITABLE FOR THE PURPOSE INTENDED EXCEPT

(INSPECTOR'S SIGNATURE)
(OFFICE) DATE

-NOTES-

#1 NAVY DEPARTMENT MATERIAL SPECIFICATIONS OF ISSUE IN EFFECT SEPT. 15, 1940, ARE APPLICABLE (17M10 INT.)
#2 THIS MATERIAL IS EQUIVALENT TO COMMERCIAL GRADE, KNOWN AS "SILICON STEEL, ELECTRICAL GRADE."
#3 A HIGH TIN PHOSPHOR BRONZE SHEET OF HIGH TENSILE STRENGTH.
#4 A SOLID SILVER BAR WITH SILVER CONTENT 99.90 TO 99.98%.
#5 THIS CUP WILL MEET NAVY SPEC. 45C7, TYPE "D," EXCEPT CUP WILL BE MADE OF STEEL AND CADMIUM PLATED PER NAVY SPEC. 48P1 IN LINE WITH CHIEF OF BU.SHIPS LETTER S83-1 (3860)EN 28/A2-11 DATED 2-7-42. THIS CUP IS CATALOG STYLE #GH-7403 SIZE 000, AMERICAN STAMPING CO., BATTLE CREEK, MICH.
#6 A MIXTURE OF SHELLAC & GUMS IN ALCOHOL WITH A PLASTICIZER AND LOADED WITH RED IRON OXIDE. (WESTINGHOUSE #672-1).

-EXCEPTIONS TO NAVY SPECIFICATIONS-

#1 ROTOR CORE CANNOT BE REMOVED & REPLACED ON KNURLED SHAFT WITHOUT DESTROYING CONCENTRICITY.
#2 C-7d(6) PREHEATING OF COMPLETED STATOR, BEFORE VARNISH DIPPING, IS OMITTED.
#3 WESTINGHOUSE #7669-1 VARNISH HEAT ENDURANCE TIME TEST IS 250 HOURS. (GRADE BB VARNISH, NAVY SPEC.52V13 REQUIRES 500 HOURS.)
#4 E-2-a MALLEABLE IRON PER NAVY SPEC. 46-I-8, TYPE "B" NOT GALVANIZED.
#5 BEARINGS ARE SINGLE SEALED WITH NO SUPPLEMENTARY HOUSING SHIELD, A ROTATING GREASE FLINGER IS ASSEMBLED ON THE SHAFT ADJACENT TO THE BEARING.

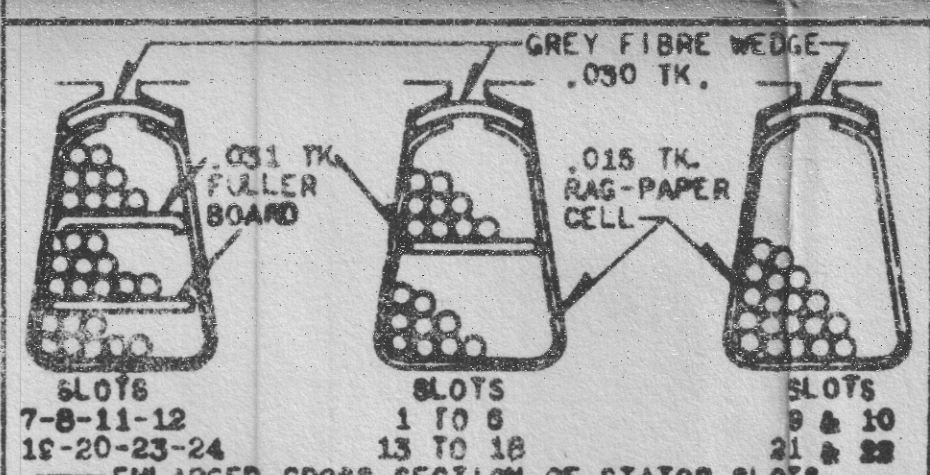

ENLARGED CROSS SECTION OF STATOR SLOTS

STATOR WINDING DATA

| | MAIN COILS | ST'G. COILS |
|---|---|---|
| NUMBER OF POLES 2 | | |
| TYPE OF CONNECTION | SERIES PARALLEL MAIN | SERIES CAPACITOR-START |
| NUMBER OF SLOTS 24 | WINDING IN 20 SLOTS | WINDING IN 12 SLOTS |
| NUMBER OF COILS | 20 | 8 |
| GROUPING OF COILS | SEE CHART | SEE CHART |
| WINDING PITCH IN SLOTS | SEE CHART | SEE CHART |
| TURNS IN SERIES PER COIL | SEE CHART | SEE CHART |
| CONDUCTOR DIAMETER | .0403 MAIN | .032 ST'G. |
| CONDUCTOR INSULATION | ENAMEL | S.C.C.ENAM. |
| RES. BETWEEN TERM. OHMS | .72/SEC. | ST'G. 3.42 |
| WEIGHT OF COPPER—LBS. | 4.3 | 1.07 |

TREATMENT OF COMPLETE STATOR

THE COMPLETELY WOUND STATOR IS GIVEN FOUR TREATMENTS IN BAKING VARNISH AS FOLLOWS:
1. DIPPING IN WESTINGHOUSE VARNISH #7669-1 FOR 1/2 HOUR.
2. DRAINING FOR 2 HOURS UNTIL DRIPPING CEASES.
3. BAKING IN OVEN AT 145° CENTIGRADE FOR 5 HOURS.
4. ITEMS 1,2, & 3 ARE THEN REPEATED UNTIL FOUR COATS HAVE BEEN APPLIED.

INSULATION MATERIAL

| | MATERIAL | NAVY SPEC. |
|---|---|---|
| SLOT CELL. TOP WEDGE. SEPARATOR WEDGE. INSUL.ON COIL LEADS. | RAG PAPER FIBRE FULLERBOARD COTTON SLEEVING. | 17-I-11 17F5 NONE 17S10 |
| INSUL. BETWEEN COILS. STUD INSULATION. COMPLETED STATOR. | .005TK. TAPE-ADHESIVE-PAPER TREATED CLOTH VARNISH | NONE EXCEPTION #3 |

WINDING PROCEDURE CHART

| SLOT NO. | 4 | 5 | 6 | 7 | 8 | 9 | 10 | 11 | 12 | 13 | 14 | 15 |
|---|---|---|---|---|---|---|---|---|---|---|---|---|
| STRANDS MAIN COIL 1ST. SEC. | 32 | 32 | 32 | 16 | 16 | 0 | 0 | 16 | 16 | 32 | 32 | 32 |
| STRANDS MAIN COIL 2ND. SEC. | 32 | 32 | 32 | 16 | 16 | 0 | 0 | 16 | 16 | 32 | 32 | 32 |
| STRANDS STARTING WINDING | 0 | 0 | 0 | 22 | 22 | 44 | 44 | 22 | 22 | 0 | 0 | 0 |

| SLOT NO. | 16 | 17 | 18 | 19 | 20 | 21 | 22 | 23 | 24 | 1 | 2 | 3 |
|---|---|---|---|---|---|---|---|---|---|---|---|---|
| STRANDS MAIN COIL 1ST. SEC. | 32 | 32 | 32 | 16 | 16 | 0 | 0 | 16 | 16 | 32 | 32 | 32 |
| STRANDS MAIN COIL 2ND. SEC. | 32 | 32 | 32 | 16 | 16 | 0 | 0 | 16 | 16 | 32 | 32 | 32 |
| STRANDS STARTING WINDING | 0 | 0 | 0 | 22 | 22 | 44 | 44 | 22 | 22 | 0 | 0 | 0 |

WIND COILS SEPARATELY.
INSULATE BETWEEN COILS IN SLOTS.

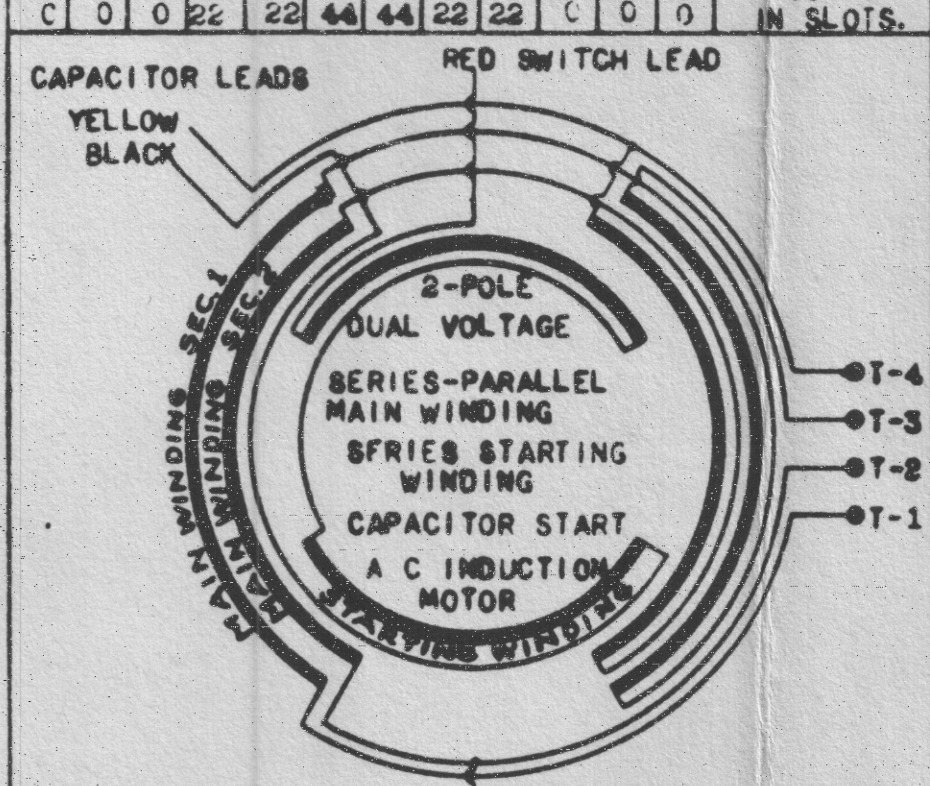


| LOW VOLTAGE | HIGH VOLTAGE |
|---|---|
| ONE LINE WIRE TO T-1 | ONE LINE WIRE TO T-1 |
| OTHER LINE WIRE TO T-4 | OTHER LINE WIRE TO T-4 |
| CONNECT T-1 TO T-2 | CONNECT T-2 TO T-3 |
| CONNECT T-3 TO T-4 | |

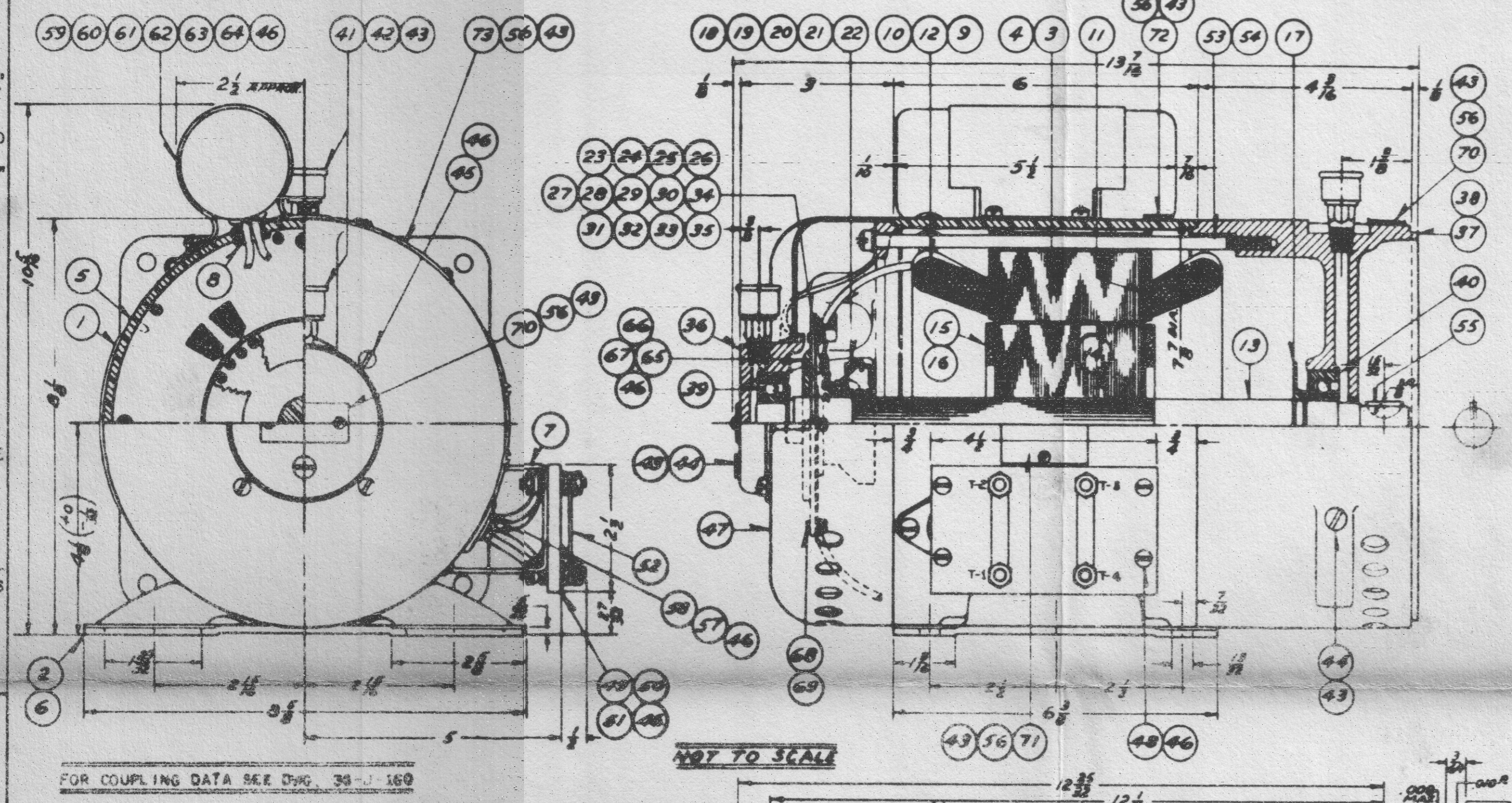


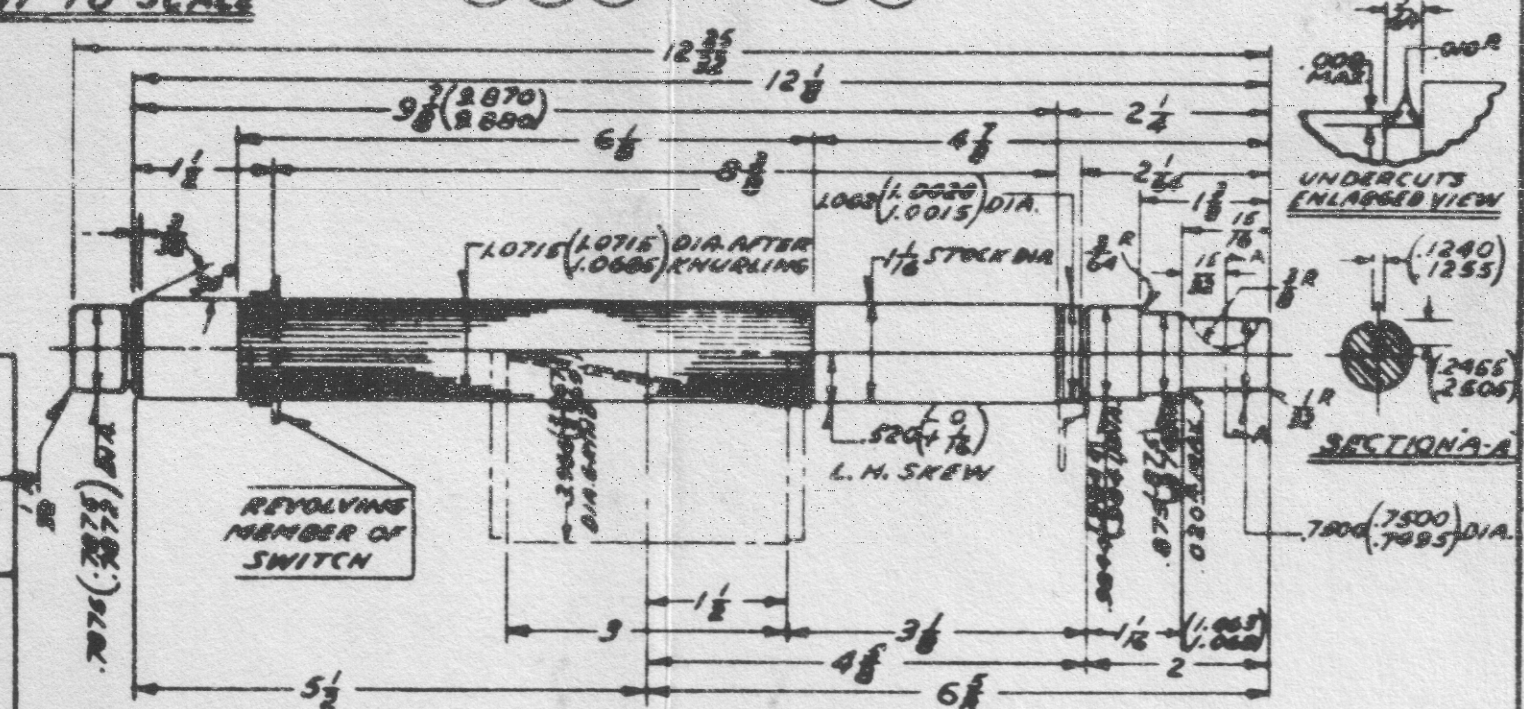


## LIST OF MATERIAL

QUANTITIES ARE FOR ONE MACHINE

| PIECE NO. | NAME OF PIECE | NO. REQ'D | MAT'L | NAVY SPEC. LATEST ISSUE | STYLE NO. | REMARKS | CONTRACTORS DRAWING NO. |
|---|---|---|---|---|---|---|---|
| 1 | FRAME | 1 | SH.S. | 47S11 | IT.#1 | | 73-B-579 |
| 2 | FOOT | 1 | SH.S. | 47S11 | 987886 | | 58-B-640 |
| 3 | PRIMARY PUNCHING | 1 SET | ELEC. SH.S. | NOTE 2 | 1187804 | 19.71# | 5-B-1620 |
| 4 | RIVET | 8 | S. | 46S17 | 188217 | | 306119 |
| 5 | PIN | 2 | S. | 46S17 | 416711 | | 332116 |
| 6 | PIN | 1 | S. | 46S17 | IT.3 | | 32-D-402 |
| 7 | BRACKET | 2 | SH.S. | 47S11 | IT.1 | | 7-D-8542 |
| 8 | BUSHING | 1 | FIBRE | NONE | 699530 | | 835886 |
| 9 | STATOR INSUL.MATL. | 1 | SEE INS.MATL. | | GROUP 2 | | 93-D-866 |
| 10 | LEADS | 1 SET | FIXT. WIRE | 15C1 | GROUP 2 | | 1-C-9047 |
| 11 | STATOR INSUL.PCHG. | 2 | FIBRE | 17F5 | 848451 | | 37-B-640 |
| 12 | STATOR COIL | 1 | CU | 15W2 | ITS.1-2 | | L-383286 |
| 13 | SHAFT | 1 | S.BAR | QQ-S-671 FS-11335 | IT.#1 | 9-B-1278 | 9-B-1278 |
| 14 | ROTOR PUNCHING | 1 SET | ELEC. SH.S. | NOTE 2 | 1187847 | 6.98 # | 95-C-557 |
| 15 | RESISTANCE RING | 2 | CU | 47C2 | IT.#1 | | 97-C-918 |
| 16 | CONDUCTOR | 36 | CU | 47C2 | IT.#15 | | 46-D-479 |
| 17 | OIL FLINGER | 1 | S. | 46S17 | IT.#1 | | 6-D-6765 |
| 18 | SLEEVE | 1 | B. | 47B2 | 831087 | 97-B-666 | 22-A-168 |
| 19 | SPRING | 1 | WIRE | 22W11 | 1127993 | | 23-D-372 |
| 20 | WEIGHT CARRIER | 1 | SH.S. | 47S11 | IT.#5 | CADMIUM PLATED | 97-B-666 |
| 21 | SPRING CARRIER | 2 | SH.S. | 47S11 | IT.#4 | CADMIUM PLATED | 97-B-666 |
| 22 | SPRING | 2 | WIRE | 22W11 | IT.#8 | | 23-D-371 |
| 23 | SPRING | 1 | PH.BZ | NOTE 3 | 831189-B | [illegible] | 22-A-156 |
| 24 | CONTACT CARRIER | 1 | PH.BZ | NOTE 3 | 831190 | | 22-A-156 |
| 25 | SPRING STOP | 2 | B. | 47B2 | 801707 | | 22-A-54 |
| 26 | TERMINAL | 1 | SH.B. | 47B2 | 831191 | | 22-A-156 |
| 27 | TERMINAL | 1 | SH.B. | 47B2 | 831192-A | | 22-A-156 |
| 28 | TERMINAL | 1 | SH.B. | 47B2 | 801706 | | 22-A-54 |
| 29 | CONTACT | 1 | SILVER | NOTE 4 | 831187 | | 23-D 278 |
| 30 | CONTACT | 2 | SILVER | NOTE 4 | 831186 | | 23-D-278 |
| 31 | SPRING | 2 | WIRE | 22W11 | 840867 | | 831488 |
| 32 | RIVET | 6 | S. | 43S11 | 549161 | | SP-663.3 |
| 33 | RIVET | 6 | S. | 43S11 | 366103-A | | SP-663.3 |
| 34 | BASE | 1 | MICARTA | 17P5 | IT.#14 | | 22-A-156 |
| 35 | SPRING PLATE | 1 | MICARTA | 17P5 | IT.#15 | | 22-A-156 |
| 36 | FRONT BRACKET | 1 | M.I. | 46-I-8 TYPE "B" | IT.#5 | NOT GALV. | 7-A-5635 |
| 37 | REAR BRACKET | 1 | M.I. | 46-I-8 TYPE "B" | IT.#1 | NOT GALV. | 7-A-5636 |
| 38 | PIN | 1 | S. | 46S17 | IT.#5 | | 32-D 402 |
| 39 | FRONT BALL BRG. | 1 | S. | 42B5 | IT.#5 | SINGLE SEAL | 7-D-8544 |
| 40 | REAR BALL BRG. | 1 | S. | 42B5 | IT.#6 | SINGLE SEAL | 7-D-8544 |
| 41 | GREASE CUP | 2 | S. | NOTE 5 | IT.#1 | CADMIUM PLATED | 6-D-6415 |
| 42 | BALL BRG. GREASE | 1 SET | GR. | 14L3 | GRADE "B" | #7754-2 | |
| 43 | CEMENT | 1 SET | ENAM. | NOTE 6 | | #672-1 | |
| 44 | 1/8 IN. PIPE PLUG | 2 | S. | 46S17 | 682874 | CADMIUM PLATED | 816483 |
| 45 | .190-32X1/2 LG. FIL.HD.M.SCREW | 4 | S. | 42S5 | | CADMIUM PLATED | |
| 46 | .190 SHAKEPROOF LOCKWASHER | 32 | S. | AC-936 A6 | IT.#5 | CAD. OR ZINC PL. | 5-D-4150 |
| 47 | END COVER | 1 | S. | 47S11 | IT.#1 | | 7-B-8426 |
| 48 | .190-32 X 1/2 LG. RD.HD.M.SCREW | 4 | S. | 42S5 | | CADMIUM PLATED | |
| 49 | TERMINAL BOARD | 1 | MICARTA | 17P5 | IT.#4 | [illegible] | 7-B-8440 |
| 50 | .190-32X1-1/4LG.STUD | 4 | B. | 43B11 | 361701 | NICKEL PLATED | 801912 |
| 51 | .190-32HEX.M.SCR.NUT | 16 | B. | 43B11 | | NICKEL PLATED | |
| 52 | LINK | 2 | B. | 47B2 | IT.#4 | NICKEL PLATED | 1-C-9033 |
| 53 | 1/4-20X7-3/4 LG. FIL.HD.M.SCREW | 4 | S. | 43S11 | IT.#6 | CADMIUM PLATED | 68-D-421 |
| 54 | 1/4 LOCKWASHER | 4 | [illegible] | 46-B-27 | 570065 | [illegible] | 860077 |
| 55 | WOODRUFF KEY | 1 | S. | #406 | | | |
| 56 | .112-40X3/16LG.RD.HD.M.SCREW | 12 | S. | 42S5 | | CADMIUM PLATED | |
| 57 | .190-32X7/16LG.RD.HD.M.SCREW | 2 | S. | 42S5 | | CADMIUM PLATED | |
| 58 | LEAD BUSHING | 1 | MOLDARTA | 17P4 | IT.#1 | | 7-D 8526 |
| 59 | CAPACITOR | 1 | | | IT.#1 | 320-380MFD 110-V | 9-D-5820 |
| 60 | CAPACITOR FR.CAP | 1 | S. | 47S11 | 987401 | CADMIUM PLATED | 32-C-435 |
| 61 | CAPACITOR REAR CAP | 1 | S. | 47S11 | 987399 | CADMIUM PLATED | 32-C-435 |
| 62 | CAPACITOR CLAMP | 1 | SH.S. | 47S11 | IT.#4 | CADMIUM PLATED | 32-C-272 |
| 63 | .190-32X1/4LG.FIL.HD.M.SCREW | 4 | S. | 42S5 | | CADMIUM PLATED | |
| 64 | BUSHING | 1 | RUBBER | 33R1 | 987402-A | | 65-D-353 |
| 65 | ADAPTER | 1 | M.I. | 46-I-8 TYPE "B" | IT.#1 | NOT GALV. | 9-D-5791 |

—CONTINUED NEXT COLUMN—

| PIECE NO. | NAME OF PIECE | NO. REQ'D | MAT'L | NAVY SPEC. LATEST ISSUE | STYLE NO. | REMARKS | CONTRACTORS DRAWING NO. |
|---|---|---|---|---|---|---|---|
| 66 | .190-32X3/8FLAT HD. M.SCREW | 2 | S. | 42S5 | | CADMIUM PLATED | |
| 67 | .190-32X3/8LG.FIL.HD. M.SCREW | 2 | S. | 42S5 | | CADMIUM PLATED | |
| 68 | .138-32X5/16LG.FIL.HD. M.SCREW | 2 | S. | 42S5 | | CADMIUM PLATED | |
| 69 | .138 SHAKEPROOF LOCKWASHER | 2 | S. | AC-936-A6 | IT.#1 | CAD. OR ZINC PL. | 5-D-4150 |
| 70 | NAMEPLATE(LUBRICATION) | 2 | SH.B. | 42N2 | | | #34713 |
| 71 | NAMEPLATE(CONNECTION) | 1 | SH.S. | 42N2 | | | #34755 |
| 72 | NAMEPLATE(SERIAL NO.) | 1 | SH.S. | 42N2 | | | #36748 |
| 73 | NAMEPLATE (MOTOR) | 1 | ALUM. ALLOY | 42N2 | | | #40245 |

FOR EXTENSIONS SEE TABLE ON DWG. #36-J-160

LIST OF SPARE PARTS AND TOOLS (PER VESSEL)

REPRODUCED FROM MFRS. DRAWING NO. 36-J-156 BUREAU NO. 14RE21J1633A
NAMES AND NUMBERS OF VESSELS: SEE TITLE BLOCK

APPLICATION: DRIVING GENERATOR ON TDE-1 RADIO TRANSMITTER
NAVY CONTRACT NO. SEE TITLE BLOCK APPLIANCE—A. C. MOTOR
SHIPBUILDER'S ORDER NO. SEE TITLE BLOCK MANUFACTURER W. E. & M. CO.

| ITEM NO. | NUMBER OF SETS | NUMBER PER SET | NAME OF PART OR TOOL | CATALOG OR SERIAL ORDERING DATA | MFRS. DRAWING AND PIECE NUMBER: PC. | DWG. NO. | BUREAU DRAWING AND PIECE NO: DWG. NO. |
|---|---|---|---|---|---|---|---|
| 1 | 1 | 1 | FRONT BALL BRG. ND 8504 (0-641) | D-7-D-8544 IT.#5 | 39 | 36-J-156 | |
| 2 | 1 | 1 | REAR BALL BRG. ND 8505 (0-642) | D-7-D-8544 IT.#6 | 40 | 36-J-156 | |
| 3 | 1 | 1 | STATIONARY SWITCH MEMBER (S-641) | D-22-A-156 S#887441 | 23 TO 35 | 36-J-156 | |
| 4 | 1 | 1 | STARTING CAPACITOR (C-641) | D-9-D-5820 IT.#1 | 59 | 36-J-156 | |
| 5 | 1 | 1 | ROTATING SWITCH MEMBER (S-642) | D-97-B-666 S#887198 | 18 TO 22 | 36-J-156 | |

MOTOR SPARE PARTS S. #1171119
SPARE PARTS FOR USE WITH—CAY 211031
TYPE FJ. FRAME #186 SEMI-ENCLOSED
1 H.P., S-PHASE, 60 CYCLE 115/230 VOLT
3450 RPM., A.C. MOTOR S. #1171118
CASE NO.
GROSS WT. NET WT.

LEGEND—
S—STYLE NUMBER
D—DRAWING NUMBER
L—ELECTRICAL SPECIFICATION NUMBER
NOTE:—SUFFIX LETTERS IN CONNECTION WITH IDENTIFYING NUMBERS FOR SPARE PARTS ARE FOR THE INFORMATION OF THE MANUFACTURER AND WILL NOT AFFECT THE MATERIAL FURNISHED ON FUTURE ORDERS.
WHEN REORDERING ALWAYS REFER TO MACHINE SERIAL NUMBER
NO. OF SHEETS 1 SHEET NO. 1

| NO. | DESCRIPTION | AUTHORITY | APP'D. | DATE |
|---|---|---|---|---|
| | | | | |

ALTERATIONS

**WESTINGHOUSE ELECTRIC & MFG. CO.**
**LIMA WORKS, LIMA OHIO, U.S.A.**

DRWG. NO. 36-J-156 SHEET 1 OF 1 SHEETS
DRAWN BY: C.R. DATE: 8-10-44 INSPECTED BY DATE
TRACED BY: C.R. DATE: " APPROVED BY DATE
SCALE N.T.S. REPRODUCTION OF FINAL PLANS MADE
—DIMENSIONS IN INCHES—

PLAN EXAMINED & FOUND SATISFACTORY

BU. SHIPS APPROVAL LTR. INM APPROVAL LTR.

DATE INSPECTOR OF NAVAL MATERIAL

OUTLINE & ASSEMBLY (OR SPECIFICATIONS FOR)

**TYPE CAY211031 A C MOTOR**
1 HP, 3450RPM, 115/230 VOLTS, 10.4/5.2 AMPS, 60CYCLE, 1 PHASE

A UNIT OF MODEL TDE-1 RADIO EQUIPMENT

CONTRACT NUMBER: NXss 20802 CONTRACT DATE: 6-1-43

BUREAU OF SHIPS PLAN NUMBER
14-RE-21-J-1633-A

CAY-T-160-5—Motor, Type CAY-211031, 115/230 V. 1 Phase, 60 Cycle, a Unit of Type CAY-211030 Rectifier Power Unit for Navy Model TDE-1. Outline, Winding Data and Specifications. (Dwg. 36-J-156)

## DESCRIPTIVE DATA

### (A) IDENTIFICATION

MANUFACTURER WESTINGHOUSE ELEC. & MFG. CO.
MANUFACTURER'S TYPE *FK* CLASS *A* FRAME NO. *D186*
NAVY CONTRACT OR SHIPBUILDER'S ORDER *SEE TITLE BLOCK* DATE
INSTALLED ON (SEE TITLE BLOCK FOR VESSELS INVOLVED)
FOR DRIVING *CAY21854 GENERATOR*
MANUFACTURER OF DRIVEN AUXILIARY *WESTINGHOUSE ELECTRIC & MFG. CO.*
REFERENCE SPECIFICATIONS
THE MOTORS DESCRIBED HEREUNDER WILL CONFORM STRICTLY WITH NAVY DEPARTMENT SPECIFICATION 17M17 INT. (MOTORS D.C. FOR SHIPBOARD USE) OF SEPT. 1, 1940 AND OF THE SPECIFICATIONS FOR THE VESSEL. EXCEPT AS SPECIFICALLY ENUMERATED BELOW.
REFERENCE DRAWINGS:
TITLE OF DWG. MANUFACTURER'S NO. BU. SHIPS NO.

### (B) MANUFACTURER'S DESCRIPTIVE DATA

MOTOR CLASSIFICATION
DEGREE OF ENCLOSURE *SEMI-ENCLOSED* SERVICE-NAVY *"A"*
METHOD OF COOLING *NATURAL VENTILATED*
SPEED CLASS *CONSTANT* DUTY CLASSIFICATION *CONTINUOUS*
VOLTAGE * *115* R.P.M. * *3450* H.P. * *1*
TYPE OF WINDING *COMPOUND* AMPERES * *11.6*
AMBIENT TEMP. *40* °C. CLASS OF INSULATION *A*
TEMPERATURE RISE, TABLE METHOD #1 & #2 CONCURRENTLY
MOUNTING (HORIZONTAL OR VERTICAL) *HORIZONTAL*
DATA MARKED "*" TO APPEAR ON NAME PLATE.

| PERFORMANCE | | EFFICIENCY | AMPERES (115 V.) |
|---|---|---|---|
| (A) GUARANTEED | 4/4 | 71% | 11.6 |
| (B) GUARANTEED | 3/4 | 66% | 9.35 |
| (C) GUARANTEED | 1/2 | 56% | 7.36 |
| (D) | 1/4 | | |

SPECIAL ATTACHMENTS: *NONE*

WEIGHTS
(A) MOTOR COMPLETE *71* LBS. (B) ROTOR COMPLETE *11 1/4* LBS.
(C) ALL SPARES BOXED, INCLUDING CONTROL SPARES ____ LBS.
SHAFT, BEARINGS & LUBRICATION
(A) SHAFT MATERIAL *COLD DRAWN CARBON STEEL* (B) TYPE OF BEARINGS BALL
(C) BALL BEARING IDENTIFICATION *SAE#204 & #205*
NAVY TYPE *A*, CLASS *a* GRADE II MANUFACTURER'S *SINGLE SEAL*
(D) TYPE OF LUBRICATION GREASE NAVY SYMBOL 14-L-3 GRADE *"B"*
(E) BEARINGS SHOWN ARE APPROVED BY BALL BEARING MANUFACTURER AS REQUIRED BY PAR. 7 C1, APPENDIX I OF NAVY SPEC. 42-B-5.
BRG. M'F'G. ____ SIGNED ____
POLES
MAIN (A) NO. *2* (B) AIR GAP NOMINAL *.025 IN. SINGLE*
COMM. (C) NO. *0* (D) AIR GAP NOMINAL ____
ARMATURE
(A) DIAM. *3.365* (B) CORE LENGTH *3 1/4*
COMMUTATOR
(A) DIAM. *2 3/8* (B) LENGTH *1* (C) WEARING DEPTH *1/8 IN. ON DIA.*
(D) *1/32* UNDERCUT (E) INSUL: BET. BARS *MICA* TO GROUND *MICA*
BRUSHES: *INPUT*
(A) NO. OF STUDS *2* (B) NO. OF BRUSHES PER STUD *1* GRADE *WL20*
(C) DIMENSIONS: LENGTH *1 1/4* WIDTH *.748* THICKNESS *.248*
(D) GRADE: NAVY *B* MANUFACTURER *STACKPOLE CARBON CO.*
*BRUSHES: SLIP RING*
*(A) NO. OF STUDS 2 (B) NO. OF BRUSHES PER STUD 1 GRADE WA10*
*(C) DIMENSIONS: LENGTH 1 1/4 WIDTH .373 THICKNESS .248*
*(D) GRADE: NAVY B MANUFACTURER STACKPOLE CARBON CO.*
*EXCEPTIONS TO NAVY SPECIFICATIONS: SEE BOTTOM OF NEXT COLUMN.*
CAPACITORS

| PIECE NOS. | NAVY SYMBOL NOS. | MANUFACTURER | MFGR'S DESIGNATION |
|---|---|---|---|
| 85-97-100 | C-603, C-604 | CORNELL DUBILIER | 9AS 11025 |
| 90-98-99 | C-601, C-602 | CORNELL DUBILIER | DYR 6050 |

### (C) TYPE TESTS

TO BE MADE ONLY ON SELECTED MOTORS REFER TO SPECIFICATION 17-M-17
EFFECTIVENESS OF ENCLOSURE *O.K.*

EFFICIENCY
FULL LOAD I²R LOSSES IN WINDINGS *102.6*
BEARING & BRUSH FRICTION AND WINDAGE *143.4*
CORE LOSSES *101.0*
STRAY LOAD LOSSES
CALCULATED EFFICIENCY AT 1/2 LOAD *62.5%*, 3/4 LOAD *68.6%*, 4/4 LOAD *72.5%*

| RESISTANCE | ARM. | SH. FLD. | SER. FLD. | COMM. FLD. |
|---|---|---|---|---|
| 24 °C | .274 | 236.8 | .079 | |
| °C | .350 | 280.0 | .0948 | |

SPEED TEST

| | COLD LINE VOLTS | COLD LINE AMPS | COLD SHUNT FLD. VOLTS | COLD SHUNT FLD. AMPS | COLD R.P.M. | HOT LINE VOLTS | HOT LINE AMPS | HOT SHUNT FLD. VOLTS | HOT SHUNT FLD. AMPS | HOT R.P.M. |
|---|---|---|---|---|---|---|---|---|---|---|
| NO LOAD | 116 | 2.1 | | | 3580 | 115 | 2.1 | | | 3760 |
| FULL LOAD | 116 | 11.0 | | | 3350 | 115 | 11.0 | | | 3450 |
| LOAD | | | | | | | | | | |
| NO LOAD | | | | | | | | | | |
| FULL LOAD | | | | | | | | | | |
| LOAD | | | | | | | | | | |

### HEATING

NORMAL LOAD HEAT RUN

| TIME | LINE VOLTS | LINE AMPS | SHUNT FLD. VOLTS | SHUNT FLD. AMPS | NO. 1 | NO. 2 | NO. 3 | NO. 4 | NO. 5 | NO. 6 | ROOM |
|---|---|---|---|---|---|---|---|---|---|---|---|
| 8:30 | 116 | 11.20 | | | 25 | | 25 | | 25 | | 25 |
| 9:00 | " | 11.10 | | | 43 | | 46 | | 41 | | 26 |
| 9:30 | " | 11.05 | | | 41 | | 51 | | 54 | | 27 |
| 10:00 | " | 11.03 | | | 43 | | 53 | | 66 | | 29 |
| 10:30 | " | 11.00 | | | 44 | | 54 | | 57 | | 27 |
| 11:00 | " | 11.00 | | | 44 | | 54.5 | | 57 | | 27 |
| 11:30 | " | 11.00 | | | 44 | | 54.5 | | 57 | | 27 |
| | | | | | ALL TEMPERATURES ARE BY THERMOMETER | | | | | | |
| TEMP. RISE DEGREES C WHILE RUNNING | | | | | 17 | | 27.5 | | 30 | | 27 |
| TEMP. RISE DEGREES C AFTER SHUTDOWN | | | | | 17 | | 29 | | 32 | | 27 |

LOCATION OF THE NUMBER IN THE TABLE (NORMAL LOAD HEAT RUN) ABOVE SHOULD BE INDICATED:
NO. 1 *BRG.* NO. 2 ____ NO. 3 *FRAME* NO. 4 ____ NO. 5 *WDG.* NO. 6 ____
SHUTDOWN TEMPERATURES *BY THERMOMETER*
ARMATURE CORE ____ COMMUTATOR ____
ARMATURE WINDING ____ FRONT BRG. *44* REAR HEAD ____
OVERSPEED *4300* TIME *5 MIN.* REMARKS-*NORMAL NOISE & VIBRATION.*
DIELECTRIC STRENGTH *1800 VOLTS FOR 1 SECOND*
INSULATION RESISTANCE *250 MEGOHMS, MOTOR TEMP. 50°C; 10000 MEGOHMS, MOTOR TEMP. 24°C.*

INSPECTOR'S SIGNATURE ____
OFFICE ____ DATE ____

### (D) CONCLUSION

IN VIEW OF THE TEST DATA SHOWN ABOVE AND THE SATISFACTORY HORSEPOWER CAPACITY, SPEED CHARACTERISTICS, POWER FACTORS AND EFFICIENCIES WHEN DRIVING THE CONNECTED AUXILIARY THROUGHOUT ITS RANGE OF SPECIFIED OPERATING CONDITIONS AS REPORTED BY I. N. M. ____ LETTER ____ OF ____ 194__, THE MOTORS ARE CONSIDERED AS MEETING SPECIFICATION AND CONTRACT REQUIREMENTS AND SUITABLE FOR THE PURPOSE INTENDED EXCEPT ____

INSPECTOR'S SIGNATURE ____
OFFICE ____ DATE ____

## NOTES

#1 NAVY DEPARTMENT MATERIAL SPECIFICATION OF ISSUE IN EFFECT SEPT. 1, 1940 ARE APPLICABLE (17M17 INT.)
#2 #10 THREADS (.190 DIA., 32 THDS PER INCH) TO BE IN ACCORDANCE WITH NATIONAL FINE THREAD SERIES PER 17M17 INT PAR. C-5b(2). ALL OTHER THDS. TO BE IN ACCORDANCE WITH NATIONAL COARSE THD. SERIES PER 17M17 INT PAR. C-5b(1), UNLESS OTHERWISE SPECIFIED.
#3 CADMIUM PLATING TO BE IN ACCORDANCE WITH NAVY DEPT. SPEC. 46P1.
#4 ALL METAL SURFACES INSIDE OF MOTOR PROTECTED WITH A COAT OF ZINC CHROMATE PRIMER, (WESTINGHOUSE #212-T) (NAVY AERO. SPEC. P27-b).
#5 THIS MATERIAL IS EQUIVALENT TO, OR BETTER THAN THE COMMERCIAL GRADE KNOWN AS "SILICON STEEL, ELECTRICAL GRADE."
#6 A MIXTURE OF SHELLAC AND GUMS IN ALCOHOL WITH A PLASTICIZER AND LOADED WITH RED IRON OXIDE (WESTINGHOUSE #672-1)
#7 A MOLDED FIBRE TUBE. (WESTINGHOUSE #5857-2)
#8 A COMPOSITION OF SYNTHETIC RESIN, ASBESTOS AND PIGMENTS.
#9 THIS CUP WILL MEET NAVY SPEC. 45C7, TYPE D, EXCEPT CUP WILL BE MADE OF STEEL AND CADMIUM PLATED PER NAVY SPEC. 46P1, IN LINE WITH CHIEF OF BU. SHIPS LETTER S63-1(3660) EN.28/A2-11 DATED 2-7-42. THIS CUP IS CATALOGUE STYLE #GN-7403 SIZE 000, AMERICAN STAMPING CO., BATTLE CREEK, MICH.
#10 THIS MATERIAL IS BRIGHT ANNEALED, HALF HARD, COLD ROLLED CARBON-STEEL (A.I.S.I. SPEC. #C-1070) AND IS ZINC PLATED TO MEET (NAVY SPEC. 46P2) OF ISSUE APRIL 1, 1938.

### ARMATURE WINDING & INSULATION DATA

ARMATURE CORE HAS 16 SLOTS. COMMUTATOR HAS 48 BARS. ARMATURE IS WOUND WITH 4-4-5 TURNS PER COIL OF .051 DIA. (#16) PAPER COVERED ENAMEL COPPER WIRE. ARMATURE HAS 26 WIRES PER SLOT.

ENDS OF FIRST COIL LIE IN BARS #24 & #25. FIRST COIL LIES IN SLOTS #1 & #8. WIRES ARE CONNECTED TO BARS #1 & #25 AND TAKEN THRU THE ARMATURE SLOTS TO THE SLIP RINGS. WINDING IS PROGRESSIVE.

COILS ARE RETAINED IN SLOTS BY 1/8 TK. HARD FIBRE WEDGE. CROSS SECTION OF COILS SHOWS METHOD OF INSULATING WIRES IN SLOTS.

COMPLETE WOUND ARMATURE IS TREATED 3 TIMES IN WESTINGHOUSE VARNISH #7669 WITH BAKING 12 HOURS AT 120°C AFTER EACH TREATMENT.

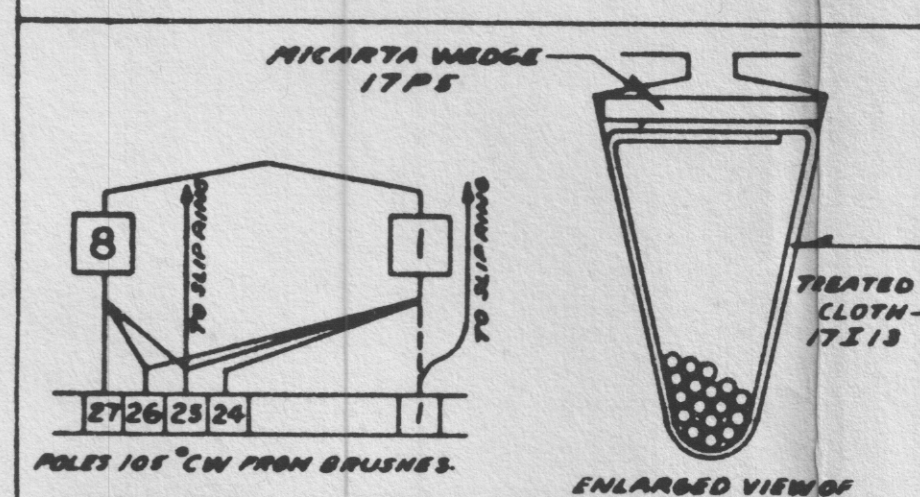

ARMATURE CONNECTIONS
ENLARGED VIEW OF ARMATURE SLOT

### FIELD COIL WINDING & INSULATION DATA

EACH SHUNT COIL CONSISTS OF 2300 TURNS OF .0159 DIA. (#26) ENAMELED COPPER WIRE WOUND ON A MOULD 3 3/4" LONG BY 2" WIDE AND 1/8" RADIUS, BY 1/2" THICK. SHUNT COIL IS INSULATED FROM SERIES COIL WITH 2 LAYERS OF .010 TK. TREATED CLOTH PLACED OVER THE COIL AND ON THE SIDES AND HELD IN PLACE WITH SCOTCH FLAT BACK TAPE.

EACH SERIES COIL CONSISTS OF 12 TURNS OF TWO .057 DIA. (#15) ENAMELED COPPER WIRES IN PARALLEL WOUND OVER THE SHUNT COIL. THE COIL IS TIED AT THE CORNERS. LEADS ARE ATTACHED AND BOUND TIGHTLY TO COIL, APPROXIMATELY ONE TURN OF 15 OF .005 CABLE BRAID USED BETWEEN LEADS AND WIRE OF SHUNT WINDING TO PROTECT THE WINDING. LEAD JOINTS ARE SOLDERED AND INSULATED WITH A CELLULOSE ACETATE BUSHING. LEAD CROSSOVERS AND CONNECTIONS ARE INSULATED WITH A CELL OF .015 TK. RAG PAPER. COILS ARE BENT TO SHAPE AND THEN DIPPED IN WESTINGHOUSE VARNISH #6109 AND BAKED 14 HOURS AT 120°C.

COILS ARE THEN TAPED OVER ALL WITH ONE LAYER OF .010 TK. TREATED CLOTH TAPE HALF OVERLAPPED, FOLLOWED BY ONE LAYER OF .007 TK. COTTON TAPE HALF OVERLAPPED. COILS ARE THEN GIVEN 3 SEALING COATS OF WESTINGHOUSE VARNISH #6108. EACH COAT IS APPLIED BY DIPPING COILS FOR ONE MINUTE AND BAKING 8 HOURS AT 120°C. LEADS ARE 41 OF .010 RUBBER AND COTTON INSULATED CABLE.

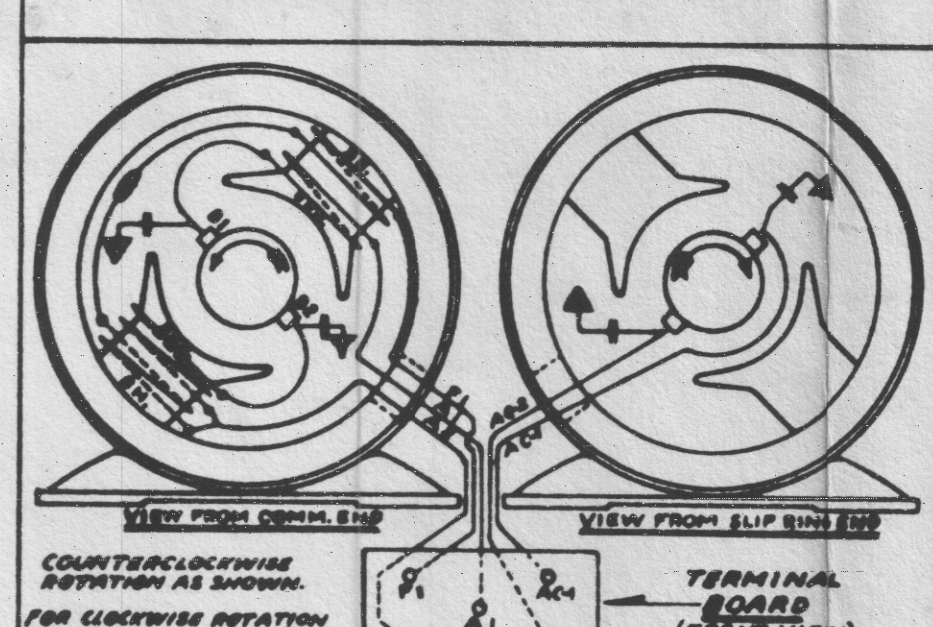

ROTATION AND CONNECTION DIAGRAM

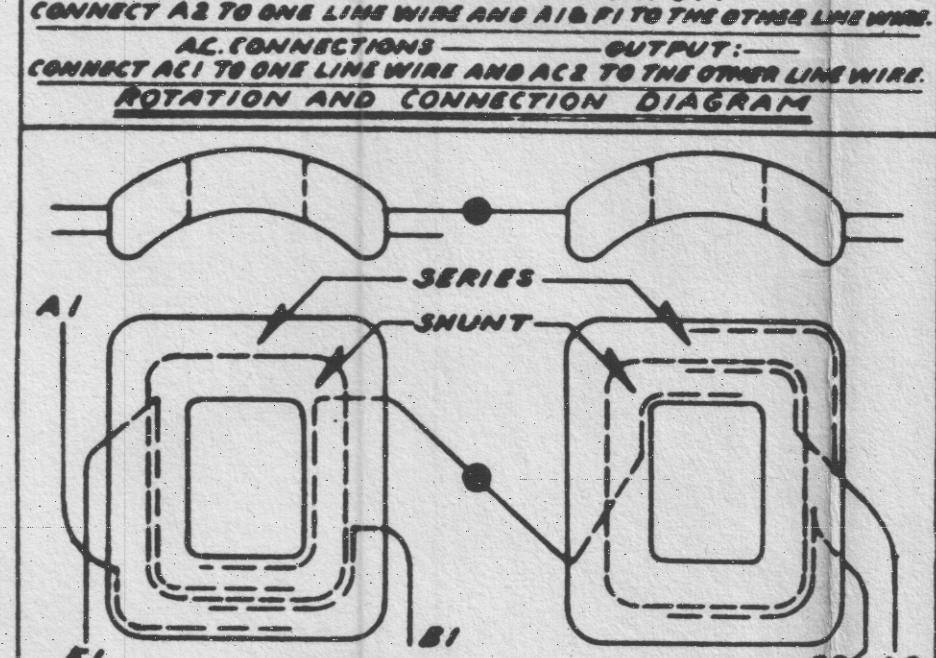

FIELD COILS

### EXCEPTIONS TO NAVY SPEC. 17MI7

#1 E-3a THE FRAME RING IS MADE OF SEMI-STEEL INSTEAD OF STEEL.
#2 C-7d(6) PREHEATING OF FIELD COILS AND ARMATURE BEFORE VARNISH DIPPING IS OMITTED.
#3 WESTINGHOUSE #6109 & #7669 VARNISH HEAT ENDURANCE TEST IS 250 HOURS. (GRADE 3B VARNISH NAVY SPEC. 52V13 REQUIRES 500 HOURS.)
#4 E-12c BRUSHHOLDERS ARE CARTRIDGE TYPE, NOT ADJUSTABLE.
#5 E-8c COMMUTATOR IS SECURED TO SHAFT BY PRESS FIT.
#6 E-8d WEARING DEPTH IS 1/8 IN. ON DIAMETER.
#7 E-6b BEARINGS ARE SINGLE SEALED WITH NO SUPPLEMENTARY HOUSING SHIELD. A ROTATING OIL FLINGER IS ASSEMBLED ON THE SHAFT, ADJACENT TO THE BEARING.
#8 E-7b ARMATURE LAMINATIONS ARE NOT CLAMPED.
#9
#10 CREEPAGE DISTANCE TO GROUND — 1/8 IN.
DISTANCE THRU AIR TO GROUND — 1/8 IN.
CREEPAGE DISTANCE TO OPPOSITE POLARITY — 1/8 IN.
DISTANCE THRU AIR TO OPPOSITE POLARITY — 1/8 IN.
#11 INPUT BRUSHES ARE GRADE WL-20 MANUFACTURED BY STACKPOLE CARBON CO.
#12 SLIP RING BRUSHES ARE GRADE WA-10 MANUFACTURED BY STACKPOLE CARBON CO.

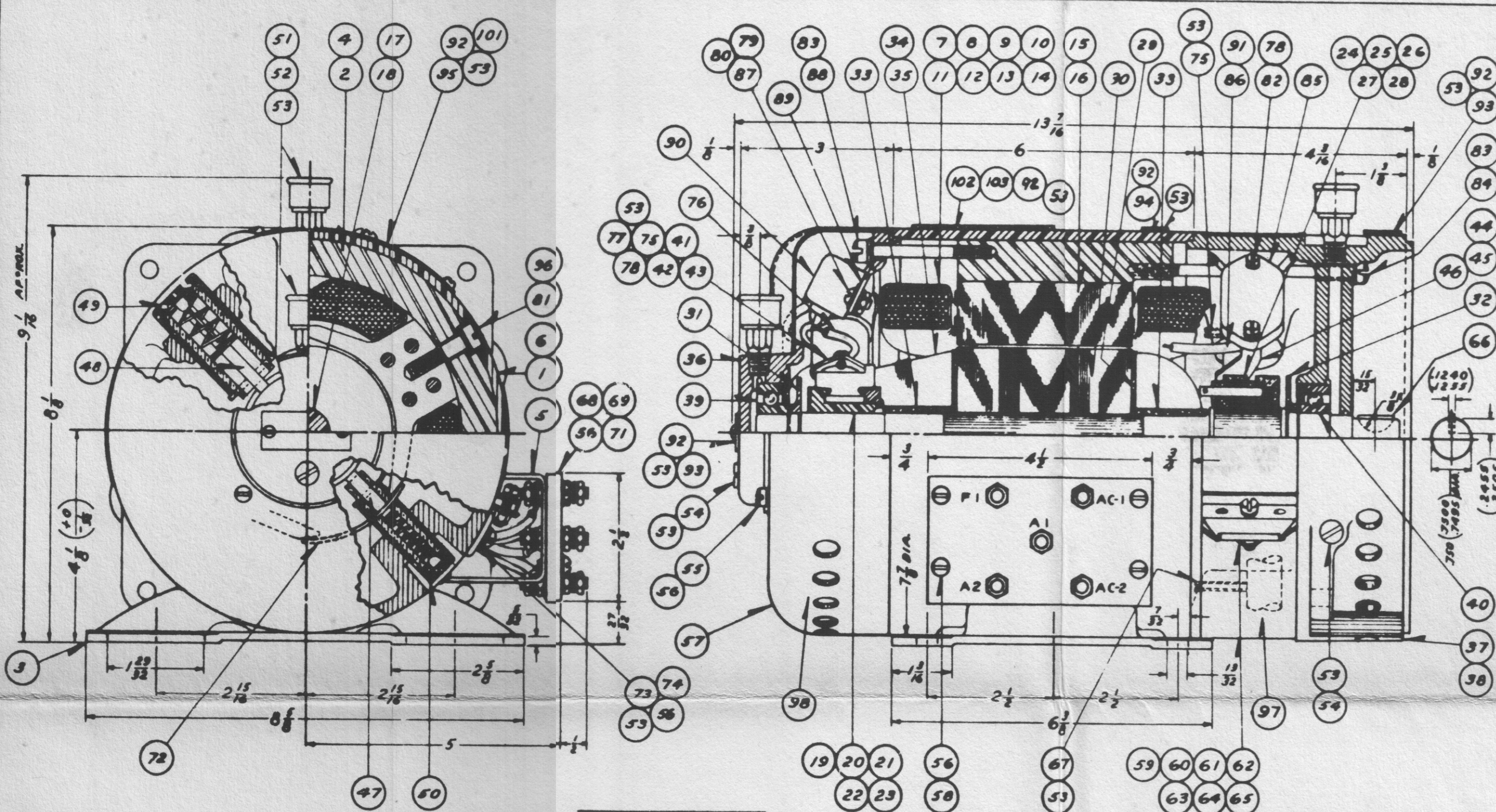

NOT TO SCALE

FOR COUPLING DATA SEE DWG. #38-J-805

## LIST OF MATERIAL

QUANTITIES ARE FOR ONE MACHINE

| PIECE NO. | NAME OF PIECE | NO. REQ'D | MAT'L | NAVY SPEC. LATEST ISSUE | STYLE NO. | REMARKS | CONTRACTORS DRAWING NO. |
|---|---|---|---|---|---|---|---|
| 1 | FRAME | 1 | SH.S. | 47S11 | 1T.#1 | [illegible] | 73-B-578 |
| 2 | FRAME RING | 1 | N.T.C.I. | 46I5 | 1T.#1 | | 7-B-8434 |
| 3 | FOOT | 1 | SH.S. | 47S11 | 387885 | | 59-B-640 |
| 4 | PIN | 2 | S. | 46S17 | 416711 | | 332116 |
| 5 | TERMINAL BOARD BRACKET | 2 | SH.S. | 47S11 | 1T.#1 | | 7-D-8542 |
| 6 | PIN | 1 | S. | 46S17 | 1T.#3 | | 32-D-402 |
| 7 | FIELD WINDING | 1 | [illegible] | 15W2 | ITS.#2-#3 | [illegible] | L-386504 |
| 8 | SPLICE LEAD | 2 | FIXT. WIRE | 15C1 | 388224 | | 801684 |
| 9 | LEAD | 2 | FIXT. WIRE | 15C1 | 1T.#6 | | 6-D-6319 |
| 10 | LEAD COMP. | 1 | FIXT. WIRE | 15C1 | ASSY.#5 | A1 | 6-D-6788 |
| 11 | LEAD COMP. | 1 | FIXT. WIRE | 15C1 | ASSY.#6 | F1 | 6-D-6788 |
| 12 | LEAD COMP. | 1 | FIXT. WIRE | 15C1 | ASSY.#2 | | 7-D-8557 |
| 13 | LEAD COMP. | 1 | FIXT. WIRE | 15C1 | ASSY.#4 | A2 | 6-D-6788 |
| 14 | LEAD COMP. | 1 | FIXT. WIRE | 15C1 | ASSY.#3 | | 7-D-8557 |
| 15 | POLE PUNCHING | 2 SETS | SH.S. | 47S11 | 277173 | [illegible] | 356295 |
| 16 | RIVET | 8 | S.BAR | 46S13 | 1T.#21 | 4 PER POLE | 816315 |
| 17 | ARMATURE COMP. | REF. | | PCS.17 7035 | ASSY.#1 | | 7-B-8423 |
| 18 | SHAFT | 1 | S.BAR | 46-S-671 PS-X1325 | 1T.#1 | | 7-B-8423 |
| 19 | COMMUTATOR BAR | 48 | CU. | 47C2 | 840746 | [illegible] | 6-B-9575 |
| 20 | STRIP | 48 | MICA | 17M5 | 1T.#5 | | 6-B-9575 |
| 21 | V-RING | 2 | MICA | 17M5 | 840748 | | 6-B-9575 |
| 22 | V-RING | 1 | S.BAR | 46-S-671 PS-X1314 | 1T.#8 | | 6-B-9575 |
| 23 | BUSHING | 1 | S.BAR | 46-S-671 PS-X1314 | 1T.#9 | | 6-B-9575 |
| 24 | COLLECTOR RING | 1 | BZ.ALUM. | 46B9 | 1T.#1 | [illegible] | 792399 |
| 25 | SCREW | 1 | B. | 47B2 | 305374 | | 400377 |
| 26 | SCREW | 1 | B. | 47B2 | 305375 | | 400377 |
| 27 | MOULDED COMPOSITION | 1 SET | MOLDARTA | NOTE #8 | 1T.#4 | | 792399 |
| 28 | PIN | 1 | S.BAR | 46S17 | 1T.#7 | | 38-D-828 |
| 29 | ARMATURE INSUL. PCHG. | 2 | MICARTA | 17P5 | 1T.#13 | | 350079 |
| 30 | ARMATURE PUNCHING | 1 SET | ELEC. SH.S. | NOTE #5 | 573596 | 4.075 LBS. | 350078 |
| 31 | OIL FLINGER | 1 | S.BAR | 46S17 | 1T.#2 | | 6-D-6783 |
| 32 | OIL FLINGER | 1 | S.BAR | 46S17 | 1T.#1 | | 6-D-6783 |
| 33 | INSULATING BUSHING | 2 | MICARTA | 17P5 | 406867 | | 816008 |
| 34 | ARMATURE INSUL. MAT'L. | 1 | SEE INS. MAT'L. | | GROUP #1 | | 1-D-2857 |
| 35 | ARMATURE WINDING | 1 | [illegible] | 15W2 | ITS.#1-#4 | | L-386504 |
| 36 | FRONT BRACKET | 1 | M.I. | 46I8 TYPE B | 1T.#1 | NOT GALVANIZED | 7-A-5635 |
| 37 | REAR BRACKET | 1 | M.I. | 46I8 TYPE B | 1T.#1 | NOT GALVANIZED | 7-A-5633 |
| 38 | PIN | 1 | S.BAR | 46S17 | 1T.#3 | | 32-D-402 |
| 39 | FRONT BALL BEARING | 1 | S. | 42B5 | 1T.#5 | [illegible] | 7-D-8544 |
| 40 | REAR BALL BEARING | 1 | S. | 42B5 | 1T.#6 | [illegible] | 7-D-8544 |
| 41 | BUSHING | 2 | FIBRE | NOTE #7 | 1T.#1 | [illegible] | 7-B-8461 |
| 42 | INSERT | 2 | B. | 47B2 | 1T.#2 | | 7-B-8461 |
| 43 | TERMINAL | 2 | B. | 47B2 | 1T.#3 | | 7-B-8461 |
| 44 | INSERT | 2 | B. | 47B2 | 1T.#1 | [illegible] | 7-B-8432 |
| 45 | TERMINAL | 2 | B. | 47B2 | 1T.#2 | C-4 | 7-B-8432 |
| 46 | BUSHING | 2 | FIBRE | NOTE #7 | 1T.#4 | | 7-B-8432 |
| 47 | CARBON COMP. (COLLECTOR) | 2 | CARBON | 17B8 | 1T.#5 | WA-10 | 4-D-8258 |
| 48 | CARBON COMP. (MOTOR) | 2 | CARBON | 17B8 | 1T.#2 | WL-20 | 5-D-4201 |
| 49 | BRUSH HOLDER SCREW | 2 | STANDARD BLACK BAKELITE | | 1T.#6 | | 1-D-8660 |
| 50 | BRUSH HOLDER SCREW | 2 | STANDARD BLACK BAKELITE | | 1T.#3 | | 1-D-8660 |
| 51 | GREASE CUP | 2 | S. | NOTE #9 | 1T.#1 | CADMIUM PLATED | 6-D-6415 |
| 52 | BALL BEARING GREASE | 1 SET | GREASE | 14L3 | | #7754-2 | |
| 53 | CEMENT | 1 SET | SHELLAC | NOTE #6 | | #672-1 | |
| 54 | 1/8 IN. PIPE PLUG | 2 | S. | 46S17 | 652874 | CADMIUM PLATED | 816483 |
| 55 | .190-32X3/8 LG.FIL.HD.M.SCREW | 4 | S. | 42S5 | | CADMIUM PLATED | |
| 56 | .190 SHAKEPROOF LOCKWASHER | 30 | S. | AC936A10 | 1T.#5 | ZINC PLATED | 5-D-4150 |
| 57 | END COVER | 1 | S. | 47S11 | 1T.#1 | | 7-B-8426 |
| 58 | .190-32X1/2 LG.RD.HD.M.SCREW | 4 | S. | 42S5 | | CADMIUM PLATED | |
| 59 | COVER | 1 | SH.S. | NOTE #10 | 1T.#1 | [illegible] | 7-B-8429 |
| 60 | BRACKET | 1 | SH.S. | 47S11 | 1T.#2 | | 7-B-8429 |
| 61 | BRACKET | 1 | SH.S. | 47S11 | 1T.#3 | | 7-B-8429 |
| 62 | ELASTIC STOP NUT-CLINCH TYPE | 1 | S. | 43B11 | 1T.#2 | CADMIUM PLATED | 6-D-6987 |
| 63 | .190-32X1/2 LG.FIL.HD.M.SCREW | 1 | S. | 42S5 | | CADMIUM PLATED | |
| 64 | WASHER | 1 | SH.S. | 47S11 | 1T.#3 | CADMIUM PLATED | 4-D-4820 |
| 65 | .1210 DIA.X1/2 LG. TUBULAR RIVET | 4 | B | 43B11 | 549193 | | SL677.2 |
| 66 | WOODRUFF KEY | 1 | S. | #406 | | | |
| 67 | .164-32X1/16 LG. HDLESS SET SCREW | 1 | S. | 42S5 | 1T.#1 | CADMIUM PLATED | 7-D-8561 |
| 68 | TERMINAL BOARD | 1 | MICARTA | 17P5 | 1T.#2 | [illegible] | 7-B-8440 |
| 69 | .190-32X1 1/4 LG. STUD | 5 | B | 43B11 | 361701 | NICKEL PLATED | 801912 |
| 70 | | | | | | | |
| 71 | .190-32 HEX. MACH. SCREW NUT | 20 | B. | 43B11 | | NICKEL PLATED | |
| 72 | WEDGE | 1 | MICARTA | 17P5 | 1T.#5 | | 37-D-667 |
| 73 | LEAD BUSHING | 1 | MOLDARTA | 17P4 | 1T.#1 | | 7-D-8540 |
| 74 | .190-32X3/8 LG.RD.HD.M.SCREW | 2 | S. | 42S5 | | CADMIUM PLATED | |
| 75 | .164-32X3/8 HDLESS SET SCREW | 5 | S. | 42S5 | 37847 | CADMIUM PLATED | 839111 |
| 76 | BRUSHHOLDER LEAD COMP. | 4 | FIXT. WIRE | 15C1 | ASSY.#5 | | 5-D-7105 |
| 77 | .138-32X1/2 LG.RD.HD.M.SCREW | 4 | B. | 47B2 | | | |
| 78 | .138 SHAKEPROOF LOCKWASHER | 8 | S. | AC936A6 | 1T.#1 | CADMIUM OR ZINC PLATED | 5-D-4150 |
| 79 | .164 SHAKEPROOF WASHER | 4 | S. | AC936A8 | 1T.#2 | ZINC PLATED | 5-D-4150 |
| 80 | .164-32 HEX. M. SCREW NUT | 4 | S. | 42S5 | | CADMIUM PLATED | |
| 81 | 5/16-18X1 1/4 LG.FIL.HD.M.SCREW | 4 | S. | 42S5 | | CADMIUM PLATED | |
| 82 | .138-32X1/2 LG.FIL.HD.M.SCREW | 4 | B. | 42S5 | | | |
| 83 | 1/4 LOCKWASHER | 8 | MN-SI-CU | 46B27 | 570065 | NON-CORR. | 860077 |
| 84 | 1/4-20X4 3/4 LG.FIL.HD.M.SCREW | 4 | S. | 42S6 | 1T.#6 | CADMIUM PLATED | 68-D-421 |

CONTINUED IN NEXT COLUMN

| PIECE NO. | NAME OF PIECE | NO. REQ'D | MAT'L | NAVY SPEC. LATEST ISSUE | STYLE NO. | REMARKS | CONTRACTORS DRAWING NO. |
|---|---|---|---|---|---|---|---|
| 85 | CAPACITOR (C-603) | 1 | MICA | [illegible] | 1T.#7 | .025 MFD WKG. V. 600 | 8-D-2576 |
| 86 | LEAD COMP. | 1 | FIXT. WIRE | 15C1 | ASSY.#1 | AC-1 | 6-D-6791 |
| 87 | .164-32X1/4 LG.RD.HD.M.SCREW | 4 | S. | 42S5 | | CADMIUM PLATED | |
| 88 | 1/4-20X2 1/4 LG.FIL.HD.M.SCREW | 4 | S. | 42S5 | | CADMIUM PLATED | |
| 89 | CAPACITOR CARRIER PLATE | 2 | SH.S. | 47S11 | 1T.#1 | CADMIUM PLATED | 7-D-8537 |
| 90 | CAPACITOR (C-601) | 1 | FOIL PAPER | [illegible] | 1T.#1 | WKG. V. 600 | 8-D-2577 |
| 91 | LEAD COMP. | 1 | FIXT. WIRE | 15C1 | ASSY.#2 | AC-2 | 6-D-6791 |
| 92 | .112-40X1/4 LG.RD.HD.M.SCREW | 14 | S. | 42S6 | | CADMIUM PLATED | |
| 93 | NAME PLATE (LUBRICATION) | 2 | SH.B. | 42N2 | | #34713 | |
| 94 | NAME PLATE (SERIAL NO.) | 1 | SH.S. | 42N2 | | #36748 | |
| 95 | NAME PLATE (MOTOR) | 1 | ALUM. ALLOY | 42N2 | TDE-2 | #40361 | |
| 96 | 1/4 LOCKWASHER | 4 | MN-SI-CU | 46B27 | 570066 | NON-CORR. | 860077 |
| 97 | CAPACITOR (C-604) | 1 | MICA | [illegible] | 1T.#8 | .025 MFD WKG. V. 600 | 8-D-2576 |
| 98 | CAPACITOR (C-602) | 1 | FOIL PAPER | [illegible] | 1T.#2 | [illegible] | 8-D-2577 |
| 99 | CAPACITOR (C-601, C-602) | 1 | FOIL PAPER | [illegible] | 1T.#3 | [illegible] | 8-D-2577 |
| 100 | CAPACITOR (C-603, C-604) | 1 | MICA | [illegible] | 1T.#9 | .025 MFD WKG. V. 600 | 8-D-2576 |
| 101 | NAME PLATE (MOTOR) | 1 | ALUM. ALLOY | 42N2 | TDE-2 | #40593 | |
| 102 | NAME PLATE (SET) | 1 | ALUM. ALLOY | 42N2 | TDE-2 | #40738 | |
| 103 | NAME PLATE (SET) | 1 | ALUM. ALLOY | 42N2 | TDE-2 | #40799 | |

FOR EXTENSIONS SEE TABLE ON DWG# 38-J-805

## LIST OF SPARE PARTS AND TOOLS (PER VESSEL)

REPRODUCED FROM MFRS. DRAWING NO. *38-J-803* BUREAU NO. *14RE 21J 1635A*
NAMES AND NUMBERS OF VESSELS: SEE TITLE BLOCK
APPLICATION: *DRIVING GENERATOR ON TDE-2 RADIO TRANS.* APPLIANCE D.C. MOTOR *ON MOT. GEN.*
NAVY CONTRACT NO. *SEE TITLE BLOCK* MANUFACTURER W. E. & M. CO.
SHIPBUILDER'S ORDER NO. *SEE TITLE BLOCK*

| ITEM NO. | NUMBER OF SETS | NUMBER PER SET | NAME OF PART OR TOOL | CATALOG OR SERIAL ORDERING DATA | PC. | DWG. NO. | BUREAU DRAWING AND PIECE NUMBER DWG. NO. |
|---|---|---|---|---|---|---|---|
| 1 | 1 | 1 | WOUND ARMATURE COMP. (E-601) | D-7-B-8423 ASSY.#1 | 17 | 38-J-803 | |
| 2 | 1 | 1 | FRONT BALL BEARING (HD-8506)(E-601) | D-7-D-8544 1T.#5 | 39 | 38-J-803 | |
| 3 | 1 | 1 | REAR BALL BEARING (HD-8505)(E-601) | D-7-D-8544 1T.#6 | 40 | 38-J-803 | |
| 4 | 2 | 1 | FIELD COIL SET COMPLETE (E-602) | D-7-B-8464 ASSY.#1 | 7 thru 14 | 38-J-803 | |
| 5 | 2 | 2 | BRUSH HOLDER (E-603) | D-7-B-8461 ASSY.#2 | 41 thru 43 | 38-J-803 | |
| 6 | 10 | 2 | CARBON COMPLETE (E-604) | D-5-D-4201 1T.#2 | 48 | 38-J-803 | |
| 7 | 1 | 2 | BRUSH HOLDER CAP (E-605) | D-1-D-8660 1T.#6 | 49 | 38-J-803 | |
| 8 | 2 | 1 | BRUSH HOLDER (C-4) (E-606) | D-7-B-8432 ASSY.#4 | 44 thru 46 | 38-J-803 | |
| 9 | 2 | 1 | BRUSH HOLDER (C-4) (E-607) | D-7-B-8432 ASSY.#4 | 44 thru 46 | 38-J-803 | |
| 10 | 10 | 2 | CARBON COMPLETE (E-608) | D-4-D-8258 1T.#5 | 47 | 38-J-803 | |
| 11 | 1 | 2 | BRUSH HOLDER CAP (E-609) | D-1-D-8660 1T.#3 | 50 | 38-J-803 | |
| 12 | 1 | 1 | CAPACITOR (C-601, C-602) | D-8-D-2577 1T.#3 | 99 | 38-J-803 | |
| 13 | 1 | 1 | CAPACITOR (C-603, C-604) | D-8-D-2576 1T.#9 | 100 | 38-J-803 | |

*MOTOR* SPARE PARTS S# *1171152-A*
SPARE PARTS FOR USE WITH - *CAY21851*
TYPE "FK" FRAME # *D186 SEMI-ENCLOSED*
*1* HP., *11.6* AMP., *115* VOLT,
*3450* RPM., D.C. MOTOR S# *957987*
CASE NO.
GROSS WT. NET WT. *30 LBS.*

LEGEND
S STYLE NUMBER
D DRAWING NUMBER
L ELECTRICAL SPECIFICATION NUMBER
NOTE: SUFFIX LETTERS IN CONNECTION WITH IDENTIFYING NUMBERS FOR SPARE PARTS ARE FOR THE INFORMATION OF THE MANUFACTURER AND WILL NOT AFFECT THE MATERIAL FURNISHED ON FUTURE ORDERS.
WHEN REORDERING ALWAYS REFER TO MACHINE SERIAL NUMBER

NO. OF SHEETS 1 SHEET NO. 1

| NO | DESCRIPTION | AUTHORITY | APP'D. | DATE |
|---|---|---|---|---|

ALTERATIONS

WESTINGHOUSE ELECTRIC & MFG. CO.
LIMA WORKS, LIMA OHIO, U.S.A.

DRWG. NO. **38-J-803** SHEET *1* OF *1* SHEET
DRAWN BY ____ DATE ____ INSPECTED BY ____ DATE ____
TRACED BY ____ DATE ____ APPROVED BY ____ DATE ____
SCALE *N.T.S.* REPRODUCTION OF FINAL PLANS MADE ____
DIMENSIONS IN INCHES

PLAN EXAMINED & FOUND SATISFACTORY

BU. SHIPS APPROVAL LTR. INM APPROVAL LTR.

DATE INSPECTOR OF NAVAL MATERIAL

OUTLINE & ASSEMBLY (OR SPECIFICATIONS FOR)

**TYPE CAY21851 D C MOTOR**
*1 H.P., 3450 R.P.M., 115 VOLTS, 11.6 AMPS. D.C.*

*A UNIT OF MODEL TDE-2 RADIO EQUIPMENT*

CONTRACT NUMBER *NXss 33634* *NXsr 38682* CONTRACT DATE *6-30-43* *10-6-43*

BUREAU OF SHIPS PLAN NUMBER

**14-RE-21J-1635-A**

CAY-T-160-6—Motor, Type CAY-21851, 115 V. D.C., a Unit of Type CAY-21848 Rectifier Power Unit for Navy Model TDE-2. Outline, Winding Data and Specifications. (Dwg. 38-J-803)

## DESCRIPTIVE DATA

### (A) IDENTIFICATION

MANUFACTURER- WESTINGHOUSE ELEC & MFG. CO.
MANUFACTURER'S TYPE FK CLASS A FRAME NO. 0186
NAVY CONTRACT OR SHIPBUILDER'S ORDER SEE TITLE BLOCK DATE
INSTALLED ON SEE TITLE BLOCK FOR VESSELS INVOLVED)
FOR DRIVING CAY 21854 GENERATOR
MANUFACTURER OF DRIVEN AUXILIARY WESTINGHOUSE ELECTRIC & MFG. CO.
REFERENCE SPECIFICATIONS
THE MOTORS DESCRIBED HEREUNDER WILL CONFORM STRICTLY WITH NAVY DEPARTMENT SPECIFICATION 17M17 INT. (MOTORS D.C. FOR SHIPBOARD USE) OF SEPT. 1, 1940 AND OF THE SPECIFICATIONS FOR THE VESSEL. EXCEPT AS SPECIFICALLY ENUMERATED BELOW.
REFERENCE DRAWINGS
TITLE OF DWG. MANUFACTURER'S NO. BU. SHIPS NO.

### (B) MANUFACTURER'S DESCRIPTIVE DATA

MOTOR CLASSIFICATION
DEGREE OF ENCLOSURE SEMI-ENCLOSED. SERVICE-NAVY A
METHOD OF COOLING NATURAL VENTILATED.
SPEED CLASS CONSTANT. DUTY CLASSIFICATION CONTINUOUS.
VOLTAGE •230 R.P.M. •3450 H.P. •1
TYPE OF WINDING COMPOUND. AMPERES •5.8
AMBIENT TEMP. 40°C. CLASS OF INSULATION A
TEMPERATURE RISE. TABLE METHOD •1 & •2 CONCURRENTLY
MOUNTING (HORIZONTAL OR VERTICAL) HORIZONTAL.
DATA MARKED • TO APPEAR ON NAME PLATE.

PERFORMANCE

| | EFFICIENCY | AMPERES (230 V.) |
|---|---|---|
| (A) GUARANTEED 4/4 | 71% | 5.8 |
| (B) GUARANTEED 3/4 | 66% | 4.7 |
| (C) GUARANTEED 1/2 | 56% | 3.7 |
| (D) 1/4 | | |

SPECIAL ATTACHMENTS NONE

WEIGHTS
(A) MOTOR COMPLETE 71 LBS. (B) ROTOR COMPLETE 11½ LBS.
(C) ALL SPARES BOXED. INCLUDING CONTROL SPARES ____ LBS.
SHAFT. BEARINGS & LUBRICATION
(A) SHAFT MATERIAL COLD DRAWN CARBON STEEL (B) TYPE OF BEARINGS- BALL
(C) BALL BEARING IDENTIFICATION SAE#204 & #205
NAVY TYPE A CLASS a GRADE II MANUFACTURER'S SINGLE SEAL.
(D) TYPE OF LUBRICATION GREASE NAVY SYMBOL 14-L-3 GRADE "B"
(E) BEARINGS SHOWN ARE APPROVED BY BALL BEARING MANUFACTURER AS REQUIRED BY PAR 7 c APPENDIX I OF NAVY SPEC. 42-B-5.
BRG. M'F'G. ______ SIGNED ______
POLES
MAIN (A) NO. 2 (B) AIR GAP NOMINAL .020 IN. SINGLE
COMM. (C) NO 0 (D) AIR GAP NOMINAL
ARMATURE
(A) DIAM. 3.375 B CORE LENGTH 3¼
COMMUTATOR
(A) DIAM. 2⅜ (B) LENGTH 1 (C) WEARING DEPTH ⅛ IN. ON DIA.
(D) 1/32 UNDERCUT (E) INSUL: BET. BARS MICA TO GROUND MICA
BRUSHES: INPUT
(A) NO. OF STUDS 2 B NO. OF BRUSHES PER STUD 1 GRADE WL20
(C) DIMENSIONS: LENGTH 1¼ WIDTH .748 THICKNESS .248
(D) GRADE - NAVY B MANUFACTURER STACKPOLE CARBON CO.
BRUSHES: SLIP RING
(A) NO. OF STUDS 2 (B) NO. OF BRUSHES PER STUD 1 GRADE WA10
(C) DIMENSIONS: LENGTH 1¼ WIDTH .373 THICKNESS .248
(D) GRADE: NAVY B MANUFACTURER STACKPOLE CARBON CO.
EXCEPTIONS TO NAVY SPECIFICATIONS: SEE BOTTOM OF NEXT COLUMN.
CAPACITORS

| PIECE NOS. | NAVY SYMBOL NOS. | MANUFACTURER | MFGR'S DESIGNATION |
|---|---|---|---|
| 85-97-100 | C-613 , C-614 | CORNELL DUBILIER | 9AS 11025 |
| 90-98-99 | C-611 , C-612 | CORNELL DUBILIER | DYR 6050 |

### (C) TYPE TESTS

TO BE MADE ONLY ON SELECTED MOTORS REFER TO SPECIFICATION 17-M-17
EFFECTIVENESS OF ENCLOSURE O.K.

EFFICIENCY
FULL LOAD I²R LOSSES IN WINDINGS 99.8
BEARING & BRUSH FRICTION AND WINDAGE 143.4
CORE LOSSES 99.0
STRAY LOAD LOSSES
CALCULATED EFFICIENCY AT 1/2 LOAD 60.4%
3/4 LOAD 69.6%
4/4 LOAD 74.5%

| RESISTANCE | ARM | SH FLD. | SER. FLD. | COMM FLD. |
|---|---|---|---|---|
| 23°C | 1.066 | 936.6 | .274 | |
| 75°C | 1.270 | 1100 | .320 | |

SPEED TEST

| | COLD LINE VOLTS | COLD LINE AMPS | COLD SHUNT FLD. VOLTS | COLD SHUNT FLD. AMPS | COLD R.P.M. | HOT LINE VOLTS | HOT LINE AMPS | HOT SHUNT FLD. VOLTS | HOT SHUNT FLD. AMPS | HOT R.P.M. |
|---|---|---|---|---|---|---|---|---|---|---|
| NO LOAD | 230 | 1.4 | | | 3580 | 230 | 1.4 | | | 3860 |
| FULL LOAD | 230 | 5.7 | | | 3470 | 230 | 5.7 | | | 3567 |
| LOAD | | | | | | | | | | |
| NO LOAD | | | | | | | | | | |
| FULL LOAD | | | | | | | | | | |
| LOAD | | | | | | | | | | |

### HEATING

NORMAL LOAD HEAT RUN

| TIME | LINE VOLTS | LINE AMPS | SHUNT FLD VOLTS | SHUNT FLD AMPS | NO 1 | NO 2 | NO 3 | NO. 4 | NO. 5 | NO. 6 | ROOM |
|---|---|---|---|---|---|---|---|---|---|---|---|
| 8:30 | | | | | 23 | | 23 | | 23 | | 23 |
| 9:00 | | | | | 45 | | 42 | | 30 | | 23 |
| 9:30 | | | | | 50 | | 46.5 | | 34 | | 23 |
| 10:00 | | | | | 52 | | 48 | | 36 | | 23 |
| 10:30 | | | | | 44.5 | | 49.5 | | 37.5 | | 24 |
| 11:00 | | | | | 55 | | 50 | | 38 | | 24 |
| 11:30 | | | | | 55.5 | | 50 | | 38 | | 24 |
| 12:00 | | | | | 56.5 | | 51 | | 39 | | 25 |
| 12:30 | 230 | 5.7 | | | 56.5 | | 51 | | 39 | | 25 |
| TEMP. RISE DEGREES C. WHILE RUNNING | | | | | 31 | | 26 | | 14 | | 25 |
| TEMP. RISE DEGREES C. AFTER SHUTDOWN | | | | | 34.5 | | 27.5 | | 14 | | 25 |

LOCATION OF THE NUMBER IN THE TABLE (NORMAL LOAD HEAT RUN) ABOVE SHOULD BE INDICATED:
NO. 1 FLD. NO. 2 ____ NO 3 FRAME NO. 4 ____ NO. 5 BRG. NO 6 ____
SHUTDOWN TEMPERATURES ____
ARMATURE CORE ____ COMMUTATOR ____
ARMATURE WINDING ____ FRONT BRG. 39.5 REAR BRG. 56.0
OVERSPEED 4300 TIME 5 MIN. REMARKS-NORMAL NOISE & VIBRATION
DIELECTRIC STRENGTH 1800 VOLTS FOR 1 SECOND
INSULATION RESISTANCE 15 MEGOHMS AT 44°C 3500 MEGOHMS AT 26°C
INSPECTOR'S SIGNATURE ____
OFFICE ____ DATE ____

### (D) CONCLUSION

IN VIEW OF THE TEST DATA SHOWN ABOVE AND THE SATISFACTORY HORSEPOWER CAPACITY, SPEED CHARACTERISTICS, POWER FACTORS AND EFFICIENCIES WHEN DRIVING THE CONNECTED AUXILIARY THROUGHOUT ITS RANGE OF SPECIFIED OPERATING CONDITIONS AS REPORTED BY I N M LETTER ____ OF ____ 194 THE MOTORS ARE CONSIDERED AS MEETING SPECIFICATION AND CONTRACT REQUIREMENTS AND SUITABLE FOR THE PURPOSE INTENDED EXCEPT

INSPECTOR'S SIGNATURE ____
OFFICE ____ DATE ____

## NOTES

#1 NAVY DEPARTMENT MATERIAL SPECIFICATION OF ISSUE IN EFFECT SEPT. 1, 1940 ARE APPLICABLE (17M17 INT)
#2 #10 THREADS (.190 DIA. 32 THDS PER INCH) TO BE IN ACCORDANCE WITH NATIONAL FINE THREAD SERIES PER 17M17 INT PAR. C-5b(2). ALL OTHER THDS. TO BE IN ACCORDANCE WITH NATIONAL COARSE THD. SERIES PER 17M17 INT PAR C-5b(1), UNLESS OTHERWISE SPECIFIED.
#3 CADMIUM PLATING TO BE IN ACCORDANCE WITH NAVY DEPT. SPEC. 46 P1.
#4 ALL METAL SURFACES INSIDE OF MOTOR PROTECTED WITH A COAT OF ZINC CHROMATE PRIMER, (WESTINGHOUSE #212-T) (NAVY AERO. SPEC P27-b).
#5 THIS MATERIAL IS EQUIVALENT TO, OR BETTER THAN THE COMMERCIAL GRADE KNOWN AS "SILICON STEEL, ELECTRICAL GRADE."
#6 A MIXTURE OF SHELLAC AND GUMS IN ALCOHOL WITH A PLASTICIZER AND LOADED WITH RED IRON OXIDE (WESTINGHOUSE #672-1)
#7 A MOLDED FIBRE TUBE. (WESTINGHOUSE #5857-2)
#8 A COMPOSITION OF SYNTHETIC RESIN, ASBESTOS AND PIGMENTS.
#9 THIS CUP WILL MEET NAVY SPEC. 45C7, TYPE D, EXCEPT CUP WILL BE MADE OF STEEL AND CADMIUM PLATED PER NAVY SPEC. 46 P1, IN LINE WITH CHIEF OF BU. SHIPS LETTER S63-1(3660) EN. 28/A2-11 DATED 2-7-'42. THIS CUP IS CATALOGUE STYLE #GH-7403 SIZE 000, AMERICAN STAMPING CO., BATTLE CREEK, MICH.
#10 THIS MATERIAL IS BRIGHT ANNEALED, HALF HARD, COLD ROLLED CARBON-STEEL (A.I.S.I. SPEC. #C-1070) AND IS ZINC PLATED TO MEET (NAVY SPEC. 46 P2) OF ISSUE, APRIL 1, 1938.

—ARMATURE WINDING & INSULATION DATA—

ARMATURE CORE HAS 16 SLOTS. COMMUTATOR HAS 48 BARS. ARMATURE IS WOUND WITH 8-9-9 TURNS PER COIL OF .036 DIA. (#19) PAPER COVERED ENAMEL COPPER WIRE. ARMATURE HAS 52 WIRES PER SLOT.

ENDS OF FIRST COIL LIE IN BARS #24 & #25 FIRST COIL LIES IN SLOTS #1 & #8. WIRES ARE CONNECTED TO BARS #1 & #25 AND TAKEN THRU THE ARMATURE SLOTS TO THE SLIP RINGS. WINDING IS PROGRESSIVE.

COILS ARE RETAINED IN SLOTS BY 1/32 TK. HARD FIBRE WEDGE. CROSS SECTION OF COILS SHOWS METHOD OF INSULATING WIRES IN SLOTS.

COMPLETE WOUND ARMATURE IS TREATED 3 TIMES IN WESTINGHOUSE VARNISH #7669 WITH BAKING 12 HOURS AT 120°C AFTER EACH TREATMENT.

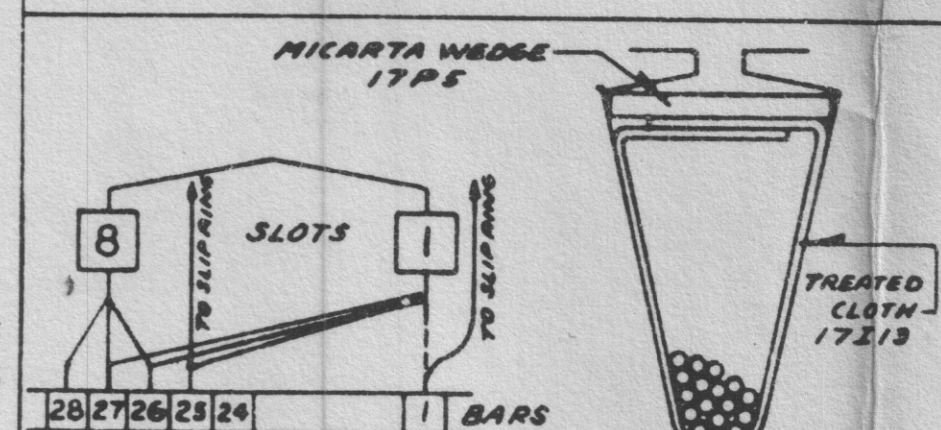


POLES 105°CW FROM BRUSHES.
ARMATURE CONNECTIONS
ENLARGED VIEW OF ARMATURE SLOT

—FIELD COIL WINDING & INSULATION DATA—

EACH SHUNT COIL CONSISTS OF 4600 TURNS OF .0113 DIA. (#29) ENAMELED COPPER WIRE WOUND ON A MOULD 3¾" LONG BY 2" WIDE AND ⅛" RADIUS, BY 1/16" THICK. SHUNT COIL IS INSULATED FROM SERIES COIL WITH 2 LAYERS OF .010 TK. TREATED CLOTH PLACED OVER THE COIL AND ON THE SIDES AND HELD IN PLACE WITH SCOTCH FLAT BACK TAPE.

EACH SERIES COIL CONSISTS OF 24 TURNS OF THE .057 DIA. (#15) ENAMELED COPPER WIRE WHICH IS WOUND OVER THE SHUNT COIL. THE COIL IS TIED AT THE CORNERS. LEADS ARE ATTACHED AND BOUND TIGHTLY TO COIL, APPROXIMATELY ONE TURN OF 15 OF .005 CABLE BEING USED BETWEEN LEADS AND WIRE OF SHUNT WINDING TO PROTECT THE WINDING. LEAD JOINTS ARE SOLDERED AND INSULATED WITH A CELLULOSE ACETATE BUSHING. LEAD CROSSOVERS AND CONNECTIONS ARE INSULATED WITH A CELL OF .015 TK. RAG PAPER. COILS ARE BENT TO SHAPE AND THEN DIPPED IN WESTINGHOUSE VARNISH #6109 AND BAKED 14 HOURS AT 120°C.

COILS ARE THEN TAPED OVER ALL WITH ONE LAYER OF .010 TK. TREATED CLOTH TAPE HALF OVERLAPPED, FOLLOWED BY ONE LAYER OF .007 TK. COTTON TAPE HALF OVERLAPPED. COILS ARE THEN GIVEN 3 SEALING COATS OF WESTINGHOUSE VARNISH #6108. EACH COAT IS APPLIED BY DIPPING COILS FOR ONE MINUTE AND BAKING 8 HOURS AT 120°C. LEADS ARE 41 OF .010 RUBBER AND COTTON INSULATED CABLE.

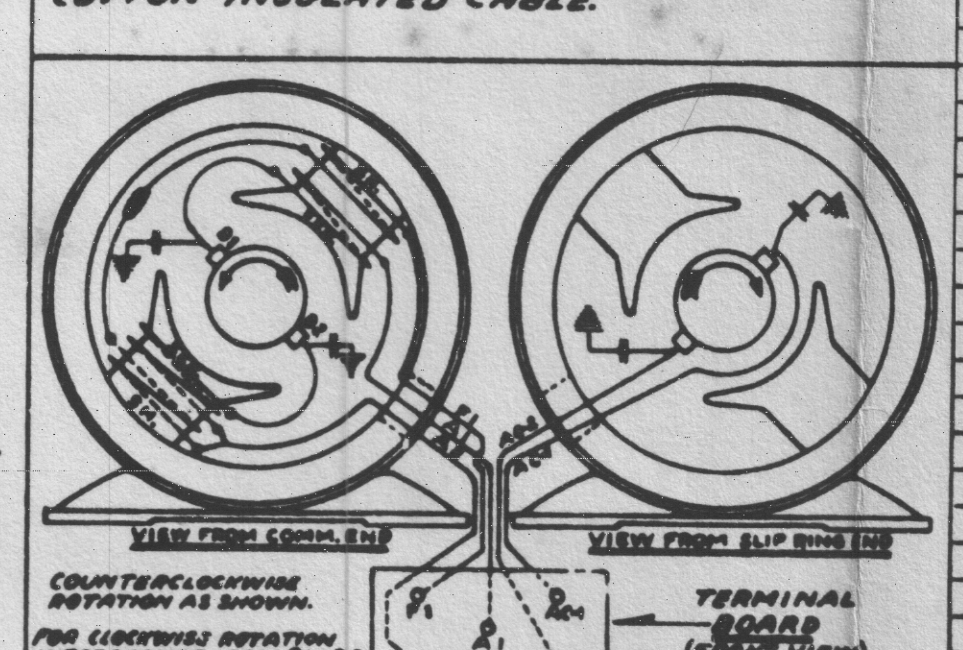


D.C. CONNECTIONS — INPUT: — CONNECT A2 TO ONE LINE WIRE AND A1 & F1 TO THE OTHER LINE WIRE.
AC. CONNECTIONS — OUTPUT: — CONNECT AC1 TO ONE LINE WIRE AND AC2 TO THE OTHER LINE WIRE.
ROTATION AND CONNECTION DIAGRAM

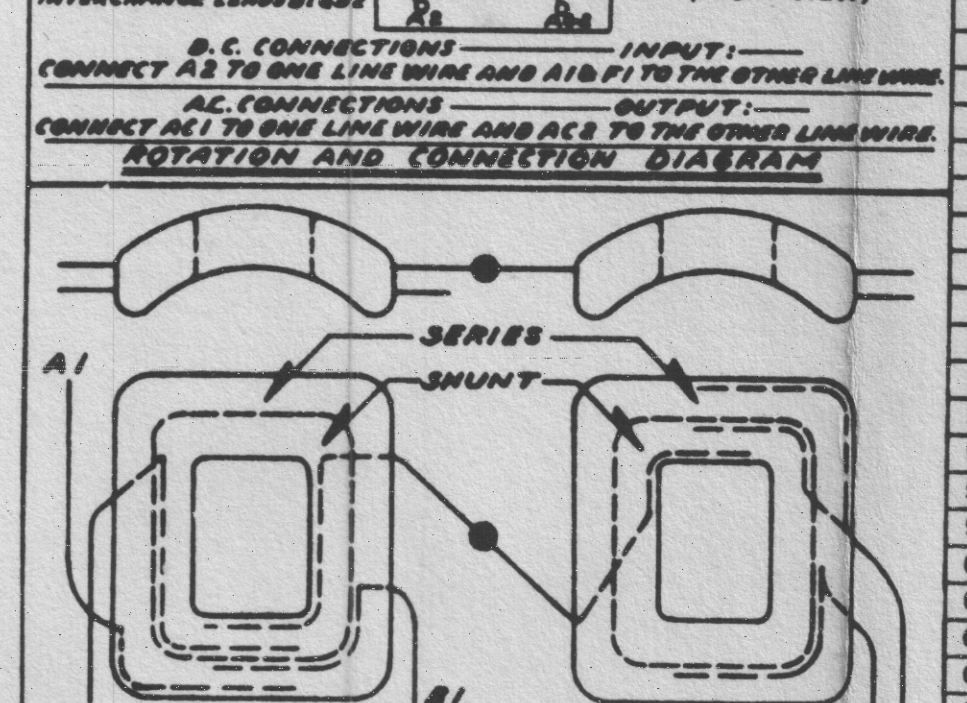


FIELD COILS

EXCEPTIONS TO NAVY SPEC. 17M17

#1 E-3a THE FRAME RING IS MADE OF SEMI-STEEL INSTEAD OF STEEL.
#2 C-7d(6) PREHEATING OF FIELD COILS AND ARMATURE BEFORE VARNISH DIPPING IS OMITTED.
#3 WESTINGHOUSE #6109 & #7669 VARNISH HEAT ENDURANCE TEST IS 250 HOURS. (GRADE BB VARNISH NAVY SPEC. 52V13 REQUIRES 500 HOURS.)
#4 E-12c BRUSHHOLDERS ARE CARTRIDGE TYPE, NOT ADJUSTABLE.
#5 E-8c COMMUTATOR IS SECURED TO SHAFT BY PRESS FIT.
#6 E-8d WEARING DEPTH IS ⅛ IN. ON DIAMETER.
#7 E-6b BEARINGS ARE SINGLE SEALED WITH NO SUPPLEMENTARY HOUSING SHIELD. A ROTATING OIL FLINGER IS ASSEMBLED ON THE SHAFT, ADJACENT TO THE BEARING.
#8 E-7b ARMATURE LAMINATIONS ARE NOT CLAMPED.
#9
#10 CREEPAGE DISTANCE TO GROUND — ⅛ IN.
DISTANCE THRU AIR TO GROUND — ⅛ IN.
CREEPAGE DISTANCE TO OPPOSITE POLARITY — ⅛ IN.
DISTANCE THRU AIR TO OPPOSITE POLARITY — ⅛ IN.
#11 INPUT BRUSHES ARE GRADE WL-20 MANUFACTURED BY STACKPOLE CARBON CO.
#12 SLIP RING BRUSHES ARE GRADE WA-10 MANUFACTURED BY STACKPOLE CARBON CO.

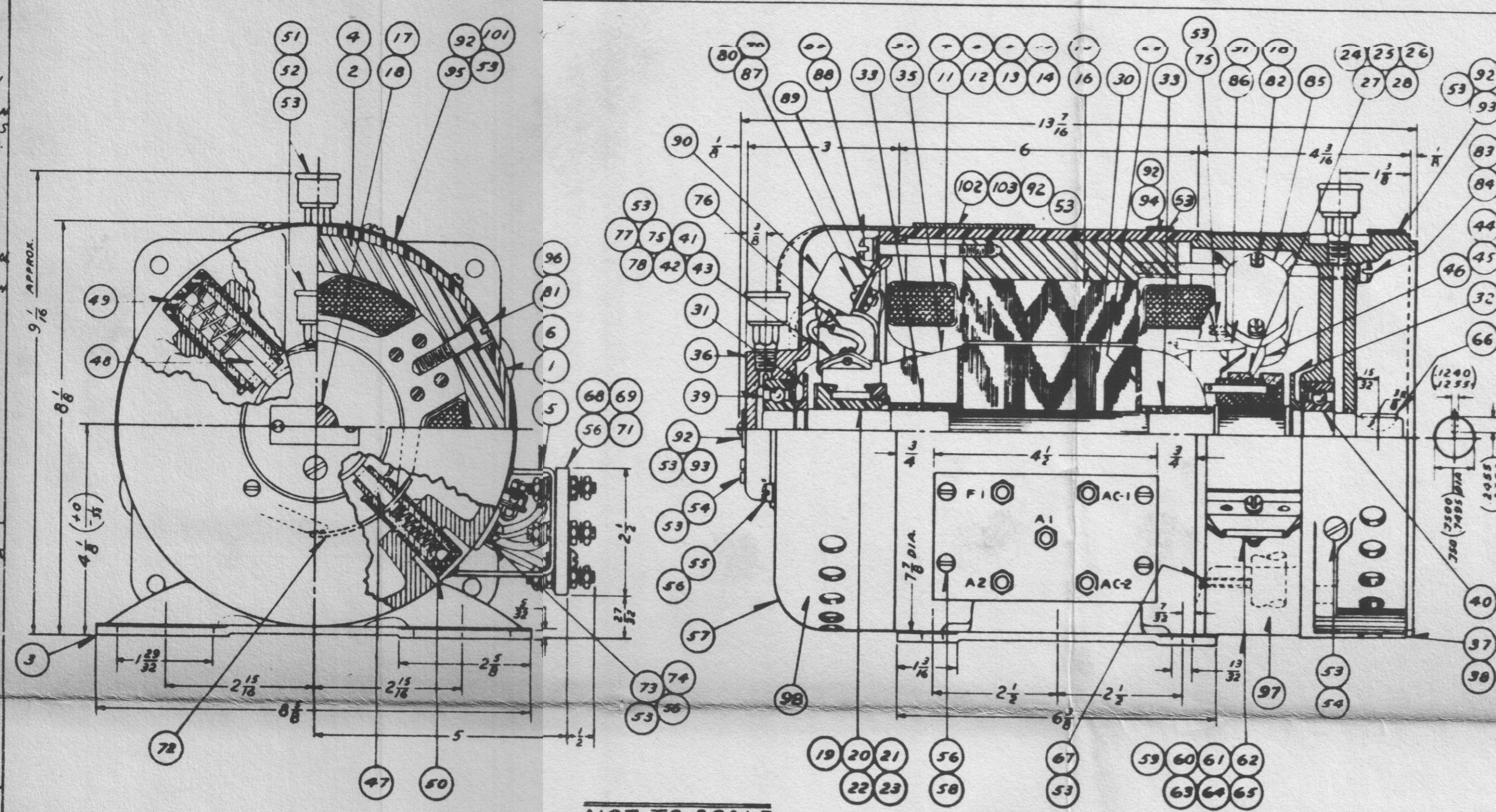


NOT TO SCALE

FOR COUPLING DATA SEE DWG. #38-J-804

## LIST OF MATERIAL

QUANTITIES ARE FOR ONE MACHINE

| PIECE NO. | NAME OF PIECE | NO. REQ'D | MAT'L | NAVY SPEC LATEST ISSUE | STYLE NO. | REMARKS | CONTRACTORS DRAWING NO. |
|---|---|---|---|---|---|---|---|
| 1 | FRAME | 1 | SH.S. | 47S11 | 1T.#1 | REF. ASSY 7-B-8465 | 73-B-578 |
| 2 | FRAME RING | 1 | H.T.C.I. | 46I5 | 1T.#1 | | 7-B-8434 |
| 3 | FOOT | 1 | SH.S. | 47S11 | 987885 | | 59-B-640 |
| 4 | PIN | 2 | S. | 46S17 | 416711 | | 332116 |
| 5 | TERMINAL BOARD BRACKET | 2 | SH.S. | 47S11 | 1T.#1 | | 7-D-8542 |
| 6 | PIN | 1 | S. | 46S17 | 1T.#3 | | 32-D-402 |
| 7 | FIELD WINDING | 1 | D. EN. COP. WIRE | 15W2 | ITS.#2-#3 | REF. ASSY 7-B-8464 | L-386505 |
| 8 | SPLICE LEAD | 2 | FIXT. WIRE | 15C1 | 388224 | | 801684 |
| 9 | LEAD | 2 | FIXT. WIRE | 15C1 | 1T.#6 | | 6-D-6319 |
| 10 | LEAD COMP. | 1 | FIXT. WIRE | 15C1 | ASSY.#5 | A1 | 6-D-6788 |
| 11 | LEAD COMP. | 1 | FIXT. WIRE | 15C1 | ASSY.#6 | F1 | 6-D-6788 |
| 12 | LEAD COMP. | 1 | FIXT. WIRE | 15C1 | ASSY.#2 | | 7-D-8557 |
| 13 | LEAD COMP. | 1 | FIXT. WIRE | 15C1 | ASSY.#4 | A2 | 6-D-6788 |
| 14 | LEAD COMP. | 1 | FIXT. WIRE | 15C1 | ASSY.#3 | | 7-D-8557 |
| 15 | POLE PUNCHING | 2 SETS | SH.S. | 47S11 | 277179 | [illegible] | 356295 |
| 16 | RIVET | 8 | S.BAR | 46S13 | 1T.#21 | 4 PER POLE | 816315 |
| 17 | ARMATURE COMP. | REF. | | PCS.177035 | ASSY.#2 | | 7-B-8423 |
| 18 | SHAFT | 1 | S.BAR | [illegible] | 1T.#1 | | 7-B-8423 |
| 19 | COMMUTATOR BAR | 48 | CU. | 47C2 | 840746 | [illegible] 6-B-9575 | 6-B-9575 |
| 20 | STRIP | 48 | MICA | 17M5 | 1T.#5 | | 6-B-9575 |
| 21 | V-RING | 2 | MICA | 17M5 | 840748 | | 6-B-9575 |
| 22 | V-RING | 1 | S.BAR | [illegible] | 1T.#8 | | 6-B-9575 |
| 23 | BUSHING | 1 | S.BAR | [illegible] | 1T.#9 | | 6-B-9575 |
| 24 | COLLECTOR RING | 1 | BZ.ALUM. | 46B9 | 1T.#1 | [illegible] | 792399 |
| 25 | SCREW | 1 | B | 47B2 | 305374 | | 400377 |
| 26 | SCREW | 1 | B | 47B2 | 305375 | | 400377 |
| 27 | MOULDED COMPOSITION | 1 SET | MOLDARTA | NOTE #8 | 1T.#4 | | 792399 |
| 28 | PIN | 1 | S.BAR | 46S17 | 1T.#7 | | 38-D-828 |
| 29 | ARMATURE INSUL. PCNG. | 2 | MICARTA | 17P5 | 1T.#13 | | 350079 |
| 30 | ARMATURE PUNCHING | 1 SET | ELEC. SH.S. | NOTE #5 | 573586 | 4.87 LBS. | 350078 |
| 31 | OIL FLINGER | 1 | S.BAR | 46S17 | 1T.#2 | | 6-D-6783 |
| 32 | OIL FLINGER | 1 | S.BAR | 46S17 | 1T.#1 | | 6-D-6783 |
| 33 | INSULATING BUSHING | 2 | MICARTA | 17P5 | 406867 | | 816008 |
| 34 | ARMATURE INSUL. MAT'L. | 1 | SEE MAT'L | | GROUP #1 | | 1-D-2857 |
| 35 | ARMATURE WINDING | 1 | [illegible] | 15W2 | ITS.#1-#6 | | L-386505 |
| 36 | FRONT BRACKET | 1 | M.I. | 46I8 TYPE "A" | 1T.#1 | NOT GALVANIZED | 7-A-5635 |
| 37 | REAR BRACKET | 1 | M.I. | 46I8 TYPE "A" | 1T.#1 | NOT GALVANIZED | 7-A-5633 |
| 38 | PIN | 1 | S.BAR | 46S17 | 1T.#3 | | 32-D-402 |
| 39 | FRONT BALL BEARING | 1 | S. | 42B5 | 1T.#5 | [illegible] | 7-D-8544 |
| 40 | REAR BALL BEARING | 1 | S. | 42B5 | 1T.#6 | [illegible] | 7-D-8544 |
| 41 | BUSHING | 2 | FIBRE | NOTE #7 | 1T.#1 | [illegible] | 7-B-8461 |
| 42 | INSERT | 2 | B. | 47B2 | 1T.#2 | | 7-B-8461 |
| 43 | TERMINAL | 2 | B. | 47B2 | 1T.#3 | | 7-B-8461 |
| 44 | INSERT | 2 | B. | 47B2 | 1T.#1 | [illegible] 7-B-8432 | 7-B-8432 |
| 45 | TERMINAL | 2 | B. | 47B2 | 1T.#2 | C-4 | 7-B-8432 |
| 46 | BUSHING | 2 | FIBRE | NOTE #7 | 1T.#4 | | 7-B-8432 |
| 47 | CARBON COMP. (COLLECTOR) | 2 | CARBON | 17B8 | 1T.#5 | WA-10 | 4-D-8258 |
| 48 | CARBON COMP. (MOTOR) | 2 | CARBON | 17B8 | 1T.#2 | WL-20 | 5-D-4201 |
| 49 | BRUSH HOLDER SCREW | 2 | STANDARD [illegible] | | 1T.#6 | | 1-D-8660 |
| 50 | BRUSH HOLDER SCREW | 2 | STANDARD [illegible] | | 1T.#3 | | 1-D-8660 |
| 51 | GREASE CUP | 2 | S. | NOTE #9 | 1T.#1 | CADMIUM PLATED | 6-D-6416 |
| 52 | BALL BEARING GREASE | 1 SET | GREASE | [illegible] | | | #7754-2 |
| 53 | CEMENT | 1 SET | ENAMEL | NOTE #6 | | | #672-1 |
| 54 | ⅛ IN. PIPE PLUG | 2 | S. | 46S17 | 652874 | CADMIUM PLATED | 816483 |
| 55 | .190-32X⅜ LG.FIL.HD.M.SCREW | 4 | S. | 42S5 | | CADMIUM PLATED | |
| 56 | .190 SHAKEPROOF LOCKWASHER | 30 | S. | AC936A10 | 1T.#5 | ZINC PLATED | 5-D-4150 |
| 57 | END COVER | 1 | S. | 47S11 | 1T.#1 | | 7-B-8426 |
| 58 | .190-32X⅜ LG.RD.HD.M.SCREW | 4 | S. | 42S5 | | CADMIUM PLATED | |
| 59 | COVER | 1 | SH.S. | NOTE #10 | 1T.#1 | [illegible] | 7-B-8429 |
| 60 | BRACKET | 1 | SH.S. | 47S11 | 1T.#2 | | 7-B-8429 |
| 61 | BRACKET | 1 | SH.S. | 47S11 | 1T.#3 | | 7-B-8429 |
| 62 | ELASTIC STOP NUT-CLINCH TYPE | 1 | S. | 43B11 | 1T.#2 | CADMIUM PLATED | 6-D-6987 |
| 63 | .190-32X¼ LG.FIL.HD.M.SCREW | 1 | S. | 42S5 | | CADMIUM PLATED | |
| 64 | WASHER | 1 | SH.S. | 47S11 | 1T.#3 | CADMIUM PLATED | 4-D-4820 |
| 65 | .121 DIA.X¼ LG. TUBULAR RIVET | 4 | B | 43B11 | 549133 | | 34677.2 |
| 66 | WOODRUFF KEY | 1 | S. | #406 | | | |
| 67 | .164-32X1/16 HDLESS SET SCREW | 1 | S. | 42S5 | 1T.#1 | CADMIUM PLATED | 7-D-8561 |
| 68 | TERMINAL BOARD | 1 | MICARTA | 17P5 | 1T.#2 | | 7-B-8490 |
| 69 | .190-32X1½ LG. STUD | 5 | B | 43B11 | 361701 | NICKEL PLATED | 801812 |
| 70 | | | | | | | |
| 71 | .190-32 HEX. MACH. SCREW NUT | 20 | B. | 43B11 | | NICKEL PLATED | |
| 72 | WEDGE | 1 | MICARTA | 17P5 | 1T.#5 | | 97-D-667 |
| 73 | LEAD BUSHING | 1 | MOLDARTA | 17P4 | 1T.#1 | | 7-D-8540 |
| 74 | .190-32X¼ LG.RD.HD.M.SCREW | 2 | S. | 42S5 | | CADMIUM PLATED | |
| 75 | .164-32X¼ HDLESS SET SCREW | 5 | S. | 42S5 | 37897 | CADMIUM PLATED | 839111 |
| 76 | BRUSHHOLDER LEAD COMP. | 4 | FIXT. WIRE | 15C1 | ASSY.#5 | | 5-D-7105 |
| 77 | .138-32X¼ LG.RD.HD.M.SCREW | 4 | B. | 47B2 | | | |
| 78 | .138 SHAKEPROOF LOCKWASHER | 8 | S. | AC936A6 | 1T.#1 | CADMIUM OR ZINC PLATED | 5-D-4150 |
| 79 | .164 SHAKEPROOF WASHER | 4 | S. | AC936A8 | 1T.#2 | CADMIUM OR ZINC PLATED | 5-D-4150 |
| 80 | .164-32 HEX. M. SCREW NUT | 4 | S. | 42S5 | | CADMIUM PLATED | |
| 81 | ¼-18X1½ LG.FIL.HD.M.SCREW | 4 | S. | 42S5 | | CADMIUM PLATED | |
| 82 | .138-32X½ LG.FIL.HD.M.SCREW | 4 | B. | 42S5 | | | |
| 83 | ¼ LOCKWASHER | 8 | MN-SI-CU | 46B27 | 570065 | NON-CORR. | 860077 |
| 84 | ¼-20X4½ LG.FIL.HD.M.SCREW | 4 | S. | 42S6 | 1T.#6 | CADMIUM PLATED | 68-D-421 |

— CONTINUED IN NEXT COLUMN —

| PIECE NO. | NAME OF PIECE | NO. REQ'D | MAT'L | NAVY SPEC LATEST ISSUE | STYLE NO. | REMARKS | CONTRACTORS DRAWING NO. |
|---|---|---|---|---|---|---|---|
| 85 | CAPACITOR (C-613) | 1 | MICA | [illegible] | 1T.#10 | .035 MFD. WKG. V. 600 | 8-D-2576 |
| 86 | LEAD COMP. | 1 | FIXT. WIRE | 15C1 | ASSY.#1 | AC-1 | 6-D-6791 |
| 87 | .164-32X⅜ LG.RD.HD.M.SCREW | 4 | S. | 42S5 | | CADMIUM PLATED | |
| 88 | ¼-20X2½ LG.FIL.HD.M.SCREW | 4 | S. | 42S5 | | CADMIUM PLATED | |
| 89 | CAPACITOR CARRIER PLATE | 2 | SH.S. | 47S11 | 1T.#1 | CADMIUM PLATED | 7-D-8537 |
| 90 | CAPACITOR (C-611) | 1 | FOIL PAPER | [illegible] | 1T.#4 | [illegible] WKG. V. 600 | 8-D-2577 |
| 91 | LEAD COMP. | 1 | FIXT. WIRE | 15C1 | ASSY.#2 | AC-2 | 6-D-6791 |
| 92 | .112-40X⅜ LG.RD.HD.M.SCREW | 14 | S. | 42S6 | | CADMIUM PLATED | |
| 93 | NAME PLATE (LUBRICATION) | 2 | SH.B. | 42N2 | | #34713 | |
| 94 | NAME PLATE (SERIAL NO.) | 1 | SH.S. | 42N2 | | #36748 | |
| 95 | NAME PLATE (MOTOR) | 1 | ALUM. ALLOY | 42N2 | TDE-2 | #40360 | |
| 96 | ⅛ LOCKWASHER | 4 | MN-SI-CU | 46B27 | 570066 | NON-CORR. | 860077 |
| 97 | CAPACITOR (C-614) | 1 | MICA | [illegible] | 1T.#11 | .035 MFD. WKG. V. 600 | 8-D-2576 |
| 98 | CAPACITOR (C-612) | 1 | FOIL PAPER | [illegible] | 1T.#5 | [illegible] WKG. V. 600 | 8-D-2577 |
| 99 | CAPACITOR (C-611, C-612) | 1 | FOIL PAPER | [illegible] | 1T.#6 | [illegible] WKG. V. 600 | 8-D-2577 |
| 100 | CAPACITOR (C-613, C-614) | 1 | MICA | [illegible] | 1T.#12 | .035 MFD. WKG. V. 600 | 8-D-2576 |
| 101 | NAME PLATE (MOTOR) | 1 | ALUM. ALLOY | 42N2 | TDE-2 | #40592 | |
| 102 | NAME PLATE (SET) | 1 | ALUM. ALLOY | 42N2 | TDE-2 | #40800 | |
| 103 | NAME PLATE (SET) | 1 | ALUM. ALLOY | 42N2 | TDE-2 | #40801 | |

FOR EXTENSIONS SEE TABLE ON DWG. # 38-J-804

## LIST OF SPARE PARTS AND TOOLS PER VESSEL

REPRODUCED FROM MFRS. DRAWING NO. 38-J-806 BUREAU NO. 14RE21J1636A
NAMES AND NUMBERS OF VESSELS SEE TITLE BLOCK
APPLICATION: DRIVING GENERATOR ON "TDE-2 RADIO TRANS. APPLIANCE D.C. MOTOR ON MOT. GEN.
NAVY CONTRACT NO. SEE TITLE BLOCK MANUFACTURER W. E. & M. CO.
SHIPBUILDER'S ORDER NO. SEE TITLE BLOCK

| ITEM NO. | NUMBER OF SETS | NUMBER PER SET | NAME OF PART OR TOOL | CATALOG OR SERIAL ORDERING DATA | PC | MFRS. DRAWING DWG NO. | BUREAU DRAWING AND PIECE NUMBER DWG. NO. |
|---|---|---|---|---|---|---|---|
| 1 | 1 | 1 | WOUND ARMATURE COMP. (E-611) | D-7-B-8423 ASSY.#2 | 17 | 38-J-806 | |
| 2 | 1 | 1 | FRONT BALL BEARING (ND-8504)(E-611) | D-7-B-8544 1T.#5 | 39 | 38-J-806 | |
| 3 | 1 | 1 | REAR BALL BEARING (ND-8505)(E-612) | D-7-D-8544 1T.#6 | 40 | 38-J-806 | |
| 4 | 2 | 1 | FIELD COIL SET COMPLETE (E-612) | D-7-B-8464 ASSY.#2 | 7 TO 14 | 38-J-806 | |
| 5 | 2 | 2 | BRUSH HOLDER (E-613) | D-7-B-8461 ASSY.#2 | 41 TO 43 | 38-J-806 | |
| 6 | 10 | 2 | CARBON COMPLETE (E-614) | D-5-D-4201 1T.#2 | 48 | 38-J-806 | |
| 7 | 1 | 2 | BRUSH HOLDER CAP (E-615) | D-1-D-8660 1T.#6 | 49 | 38-J-806 | |
| 8 | 2 | 1 | BRUSH HOLDER (C-4) (E-616) | D-7-B-8432 ASSY.#4 | 44 TO 46 | 38-J-806 | |
| 9 | 2 | 1 | BRUSH HOLDER (C-4) (E-617) | D-7-B-8432 ASSY.#4 | 46 | 38-J-806 | |
| 10 | 10 | 2 | CARBON COMPLETE (E-618) | D-4-D-8258 1T.#5 | 47 | 38-J-806 | |
| 11 | 1 | 2 | BRUSH HOLDER CAP (E-619) | D-1-D-8660 1T.#3 | 50 | 38-J-806 | |
| 12 | 1 | 1 | CAPACITOR (C-611, C-612) | D-8-D-2577 1T.#6 | 99 | 38-J-806 | |
| 13 | 1 | 1 | CAPACITOR (C-613, C-614) | D-8-D-2576 1T.#12 | 100 | 38-J-806 | |

MOTOR SPARE PARTS S#1171153-A
SPARE PARTS FOR USE WITH — CAY21852
TYPE "FK" FRAME S.0186 SEMI-ENCLOSED
1 HP. 5.8 AMP. 230 VOLT.
3450 RPM., D.C. MOTOR S# 267980
CASE NO.
GROSS WT. NET WT. 30 LBS.

LEGEND
S STYLE NUMBER
D DRAWING NUMBER
L ELECTRICAL SPECIFICATION NUMBER
NOTE: SUFFIX LETTERS IN CONNECTION WITH IDENTIFYING NUMBERS FOR SPARE PARTS ARE FOR THE INFORMATION OF THE MANUFACTURER AND WILL NOT AFFECT THE MATERIAL FURNISHED ON FUTURE ORDERS.
WHEN REORDERING ALWAYS REFER TO MACHINE SERIAL NUMBER
NO. OF SHEETS 1 SHEET NO. 1

| NO. | DESCRIPTION | AUTHORITY | APP'D | DATE |
|---|---|---|---|---|

ALTERATIONS

**WESTINGHOUSE ELECTRIC & MFG. CO.**
**LIMA WORKS, LIMA OHIO, U.S.A.**

DRWG. NO. 38-J-806 SHEET 1 OF 1 SHEET
DRAWN BY C.R. DATE 8-10-41 INSPECTED BY ____ DATE ____
TRACED BY " DATE ____ APPROVED BY ____ DATE ____
SCALE N.T.S. REPRODUCTION OF FINAL PLANS MADE ____
— DIMENSIONS IN INCHES —

PLAN EXAMINED & FOUND SATISFACTORY

BU. SHIPS APPROVAL LTR. INM APPROVAL LTR.

DATE INSPECTOR OF NAVAL MATERIAL

OUTLINE & ASSEMBLY (OR SPECIFICATIONS FOR)

**TYPE CAY 21852 D C MOTOR**
1 H.P., 3450 RPM, 230 VOLTS, 5.8 AMPS, D.C.

A UNIT OF MODEL TDE-2 RADIO TRANSMITTER

CONTRACT NUMBER: NXss 33634 NXsr 38682 CONTRACT DATE: 6-30-43 10-6-43

BUREAU OF SHIPS PLAN NUMBER
14-RE-21-J-1636-A

CAY-T-160-7—Motor, Type CAY-21852, 230 V. D.C., a Unit of Type CAY-21849 Rectifier Power Unit for Navy Model TDE-2. Outline, Winding Data and Specifications. (Dwg. 38-J-806)

## DESCRIPTIVE DATA

### (A) IDENTIFICATION

MANUFACTURER—WESTINGHOUSE ELEC & MFG. CO.
MANUFACTURER'S TYPE *FS* CLASS— *A* FRAME NO. *186*
NAVY CONTRACT OR SHIPBUILDER'S ORDER— *SEE TITLE BLOCK* DATE
INSTALLED ON—(SEE TITLE BLOCK FOR VESSELS INVOLVED)
FOR DRIVING— *CAY 21854 GENERATOR*
MANUFACTURER OF DRIVEN AUXILIARY— *WESTINGHOUSE ELEC. & MFG. CO.*
REFERENCE SPECIFICATIONS
THE MOTORS DESCRIBED HEREUNDER WILL CONFORM STRICTLY WITH NAVY DEPARTMENT SPECIFICATION 17M10 (INT.) (MOTORS A.C. FOR SHIPBOARD USE) OF SEPT. 15, 1940 AND OF THE SPECIFICATIONS FOR THE VESSEL EXCEPT AS SPECIFICALLY ENUMERATED BELOW.
REFERENCE DRAWINGS:

| TITLE OF DWG. | MANUFACTURER'S NO. | BU. SHIPS NO. |
|---|---|---|
| | | |

### (B) MANUFACTURER'S DESCRIPTIVE DATA

MOTOR CLASSIFICATION
DEGREE OF ENCLOSURE— *SEMI-ENCL.*
METHOD OF COOLING— *NATURAL-VENTILATED*
SPEED CLASS— *CONSTANT* DUTY CLASSIFICATION— *CONTINUOUS*
VOLTAGE— *220/440* FREQUENCY— *60* CYCLES— NUMBER OF PHASES— *3*
TYPE *3 PHASE AC* SQ. CAGE IND.—RPM (SYN.) *3600* (F.L.) *3450*
TORQUE CLASSIFICATION— *NORMAL* NO. OF POLES— *2*
CURRENT CLASSIFICATION— *NORMAL STARTING CURRENT*
AMBIENT TEMP.— *40* °C. CLASS OF INSULATION— *A*
TEMPERATURE RISE. TABLE #1 METHOD #1 & #2 CONCURRENTLY
MOUNTING (HORIZONTAL OR VERTICAL)— *HORIZONTAL*
TYPE OF ELECTRIC BRAKE AND TORQUE RATING— *NONE*
MOTOR RATING
HORSEPOWER *1*

$$\text{FORMULA H.P.} = \frac{(\quad) \times \left(1.05 + \frac{1.35}{(\quad)+3}\right)}{(\quad)} = \text{H.P.}$$

LOAD LIMIT H.P. =
NOTE—ABOVE FORMULA IS BASED ON CHARACTERISTIC CURVES OF DRIVEN AUXILIARY SHOWN ON PLAN— BU. SHIPS NO.
PERFORMANCE

| | (440 VOLTS) AMPERES | EFFICIENCY | POWER FACTOR |
|---|---|---|---|
| (A) LOCKED ROTOR (STG. COND.) | 10.6 | 0 | |
| (B) GUARANTEED 4/4 | 1.59 | 74 | 85 |
| (C) GUARANTEED 3/4 | 1.29 | 73 | 78 |
| (D) GUARANTEED 1/2 | 1.00 | 71 | 69 |
| (E) 1/4 | | | |
| (F) NO LOAD (IDLING) | | | |

(G) STARTING TORQUE—NOT LESS THAN *300* % FULL LOAD TORQUE
(H) PULLOUT TORQUE—NOT LESS THAN *300* % FULL LOAD TORQUE
SPECIAL ATTACHMENTS: *NONE*

WEIGHTS
(A) MOTOR COMPLETE— *54* LBS. (B) ROTOR COMPLETE— *8* LBS.
(C) ALL SPARES BOXED, INCLUDING CONTROL SPARES— LBS.
SHAFT, BEARINGS & LUBRICATION
(A) SHAFT MATERIAL— *COLD DRAWN CARBON STEEL* (B) TYPE OF BEARINGS—BALL
(C) BALL BEARING IDENTIFICATION
NAVY—TYPE A CLASS *4* GRADE II MANUFACTURER'S *SAE #204 & #205 SINGLE SEAL*
(D) TYPE OF LUBRICATION—GREASE NAVY SYMBOL—14-L-3 GRADE "B"
(E) BEARINGS SHOWN ARE APPROVED BY BALL BEARING MANUFACTURER AS REQUIRED BY PAR. 7 (c), APPENDIX I OF NAVY SPEC. 42 B 5.
(BEARING MANUFACTURER'S SIGNATURE)
STATOR CORE
(A) DIAM. (INSIDE)— *4.000* (B) CORE LENGTH— *1 3/4* IN. (C) AIR GAP— *SINGLE .017*
ROTOR CORE
(A) DIAM. (OUTSIDE)— *3.966* (B) NO. OF BARS— *30*
(C) MATERIAL OF BARS— *.162 DIA. COPPER BAR* (D) SIZE OF END RING— *2.593 I.D. 3.966 O.D.*
(E) MATERIAL OF END RING— *.125 THICK COPPER* (F) CONSTRUCTION— *SKEWED*
EXCEPTIONS TO NAVY SPECIFICATIONS:
AS PER SECTION (A) ABOVE EXCEPT: *SEE NEXT COLUMN.*

### (C) TYPE TESTS

TO BE MADE ONLY ON SELECTED MOTORS. REFER TO SPECIFICATION 17-M-10
EFFECTIVENESS OF ENCLOSURE *O.K.*

EFFICIENCY
I SQUARED R LOSSES IN WINDINGS *41.6*
BEARING FRICTION AND WINDAGE *71.5*
CORE LOSSES *106*
CALCULATED EFFICIENCY AT 1/2 LOAD *70.5%*
3/4 LOAD *75.5%*
4/4 LOAD *77.5%*

MOTOR TORQUE

| STATIONARY VOLTS | STATIONARY AMPS | STATIONARY FT. LB. | PULL OUT VOLTS | PULL OUT AMPS. | PULL OUT FT. LBS. |
|---|---|---|---|---|---|
| 220 | 19.6 | 5.70 | | | |

HEATING:

NORMAL LOAD HEAT RUN

| TIME | LINE VOLTS | STATOR AMPERES A | B | C | TEMPERATURES BY THERMOMETERS* °C NO. 1 | NO. 2 | NO. 3 | NO. 4 | NO. 5 | NO. 6 | ROOM |
|---|---|---|---|---|---|---|---|---|---|---|---|
| 10:00 | | | | | 26 | | 25 | | 25 | | 26 |
| 10:30 | | | | | 43 | | 28 | | 36 | | 26 |
| 11:00 | | | | | 48 | | 35 | | 42 | | 26 |
| 11:30 | | | | | 51 | | 37 | | 48 | | 25 |
| 12:00 | | | | | 54 | | 38 | | 51 | | 25 |
| 12:30 | | | | | 56 | | 39 | | 53 | | 25 |
| 1:00 | | | | | 55 | | 39 | | 53 | | 26 |
| 1:30 | 220 | 2.95 | AV. | | 55 | | 39 | | 53 | | 25 |
| TEMP. RISE DEGREES C. WHILE RUNNING | | | | | 30 | | 14 | | 28 | | |
| TEMP. RISE DEGREES C. AFTER SHUT DOWN | | | | | 33 | | 14 | | 29 | | |

*LOCATION OF THE NUMBERED THERMOMETERS IN THE TABLE (NORMAL LOAD HEAT RUN) ABOVE SHOULD BE INDICATED:
NO. 1 *FLD.* NO. 2 NO. 3 *BRG.* NO. 4 NO. 5 *FRAME* NO. 6

POWER FACTOR:

| % LOAD | FIELD AMPS. (SYN. MOTOR) | STATOR AMPERES A | B | C | FREQUENCY | WATTS | POWER FACTOR | R.P.M. |
|---|---|---|---|---|---|---|---|---|
| 1/2 | | 2.01 | AV. | | 60 | 580 | 70.5 | |
| 3/4 | | 2.45 | AV. | | 60 | 760 | 81.0 | |
| 4/4 | | 2.95 | AV. | | 60 | 980 | 86.2 | |
| 5/4 | | 3.50 | AV. | | 60 | 1230 | 89.3 | |

(INSPECTOR'S SIGNATURE)
(OFFICE) DATE

### (D) CONCLUSION

IN VIEW OF THE TEST DATA SHOWN ABOVE AND THE SATISFACTORY HORSEPOWER CAPACITY, SPEED CHARACTERISTICS, POWER FACTORS AND EFFICIENCIES WHEN DRIVING THE CONNECTED AUXILIARY THROUGHOUT ITS RANGE OF SPECIFIED OPERATING CONDITIONS, AS REPORTED BY I. N. M. LETTER OF 194 . THE MOTORS ARE CONSIDERED AS MEETING SPECIFICATION AND CONTRACT REQUIREMENTS AND SUITABLE FOR THE PURPOSE INTENDED EXCEPT

(INSPECTOR'S SIGNATURE)
(OFFICE) DATE

—NOTES—

#1. NAVY DEPARTMENT MATERIAL SPECIFICATIONS OF ISSUE IN EFFECT SEPT. 15, 1940 ARE APPLICABLE (17M10 INT.)
#2. THIS MATERIAL IS EQUIVALENT TO COMMERCIAL GRADE KNOWN AS—"FIELD GRADE ELECTRICAL STEEL."
#3. A MIXTURE OF SHELLAC AND GUMS IN ALCOHOL WITH A PLASTICIZER AND LOADED WITH RED IRON OXIDE. (WESTINGHOUSE #672-1)
#4. #10 THREADS (.190 DIA., 32 THDS. PER INCH) TO BE IN ACCORDANCE WITH NATIONAL FINE THREAD SERIES PER 17M10 INT., PAR. C-5b(2). ALL OTHER THDS. TO BE IN ACCORDANCE WITH NATIONAL COARSE THD. SERIES PER 17M10 INT., PAR. C-5b(1) UNLESS OTHERWISE SPECIFIED.
#5. CADMIUM PLATING TO BE IN ACCORDANCE WITH NAVY DEPT. SPEC. 46P1.
#6. ALL METAL SURFACES INSIDE OF MOTOR PROTECTED WITH A COAT OF ZINC CHROMATE PRIMER. (WESTINGHOUSE #212-T) (NAVY AERO. SPEC. P27-b)
#7. THIS CUP WILL MEET NAVY SPEC. 45C7, TYPE D, EXCEPT CUP WILL BE MADE OF STEEL AND CADMIUM PLATED PER NAVY SPEC. 46P1 IN LINE WITH CHIEF OF BU. SHIPS LETTER S63-1(3660) EN28/A2-11 DATED 2-7-42. THIS CUP IS CATALOGUE STYLE # GH-7403 SIZE 000, AMERICAN STAMPING CO., BATTLE CREEK, MICHIGAN.

—EXCEPTIONS TO NAVY SPECIFICATIONS—

#1. ROTOR CORE CANNOT BE REMOVED AND REPLACED ON KNURLED SHAFT WITHOUT DESTROYING CONCENTRICITY.
#2. PREHEATING OF COMPLETED STATOR, BEFORE VARNISH DIPPING, IS OMITTED.
#3. WESTINGHOUSE #7669-1 VARNISH HEAT ENDURANCE TEST IS 250 HOURS. (GRADE BB VARNISH NAVY SPEC. 52 V 13 REQUIRES 500 HOURS.)
#4.
#5. E-Sh. BEARINGS ARE SINGLE SEALED WITH NO SUPPLEMENTARY HOUSING SHIELD. A ROTATING GREASE FLINGER IS ASSEMBLED ON THE SHAFT ADJACENT TO THE BEARING.

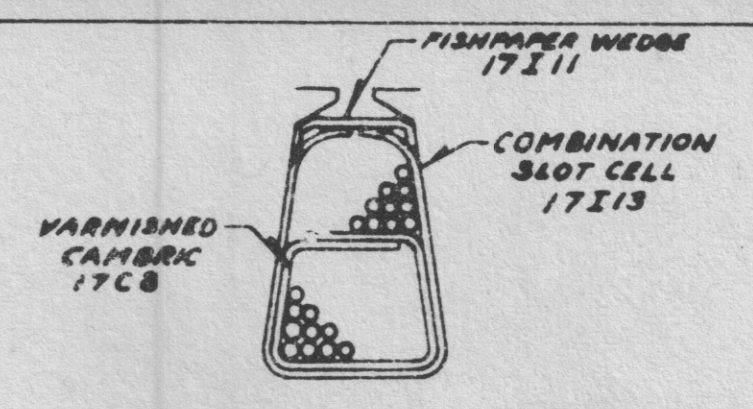

ENLARGED CROSS-SECTION OF A STATOR SLOT.

STATOR WINDING DATA

| | |
|---|---|
| NUMBER OF POLES | 2 |
| TYPE OF CONNECTION | SERIES-PARALLEL STAR |
| NUMBER OF SLOTS | 24 |
| NUMBER OF COILS | 24 |
| GROUPING OF COILS | 6 |
| WINDING PITCH IN SLOTS | 1-8 |
| TURNS IN SERIES PER COIL | 55 |
| CONDUCTOR DIAMETER | .0285 |
| CONDUCTOR INSULATION | SINGLE COTTON COVERED WIRE & COTTON TAPE |
| RES. BETWEEN TERM. OHMS AT 25° C. | 16-SERIES CONNECTION |
| WEIGHT OF COPPER—LBS. | 4.75 |

TREATMENT OF COMPLETE STATOR

THE COMPLETELY WOUND STATOR IS GIVEN FOUR TREATMENTS IN BAKING VARNISH AS FOLLOWS:
1. DIPPING IN WESTINGHOUSE VARNISH #7669-1 FOR 1/2 HOUR.
2. DRAINING FOR 2 HOURS UNTIL DRIPPING CEASES.
3. BAKING IN AN OVEN AT 140° TO 150° CENTIGRADE FOR 5 HOURS.
4. ITEMS 1, 2, & 3 ARE THEN REPEATED UNTIL FOUR COATS OF VARNISH HAVE BEEN APPLIED.

INSULATION MATERIAL

| | MATERIAL | NAVY SPEC |
|---|---|---|
| COMBINATION SLOT CELL | FISH PAPER & TR. CLOTH | 17I13 |
| COIL SEPARATOR CELL | VARNISHED CAMBRIC | 17C8 |
| TOP WEDGE | FISHPAPER | 17I11 |
| INSULATION BETWEEN PHASES | VARNISHED CAMBRIC | 17C8 |
| INSUL. ON COIL EXTENSIONS | COTTON TAPE | 17T15 |
| INSULATION ON COIL LEADS | COTTON SLEEVING | 17S10 |
| COMPLETED STATOR | VARNISH | |

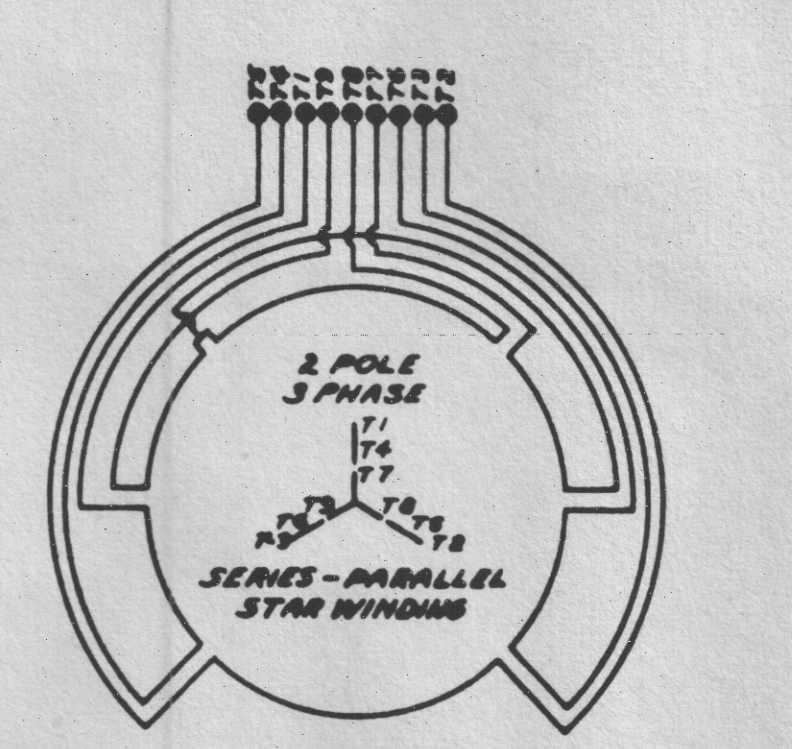


| HIGH VOLTAGE | | | | LOW VOLTAGE | | |
|---|---|---|---|---|---|---|
| CONNECT | T4 TO T7 | T5 TO T8 | T6 TO T9 | T1 TO T7 | T2 TO T8 | T3 TO T9 |
| USE FOR LEADS | T1-T2-T3 | | | 1ST LEAD | 2ND LEAD | 3RD LEAD |
| | | | | SHORT CIRCUIT T4-T5-T6 | | |

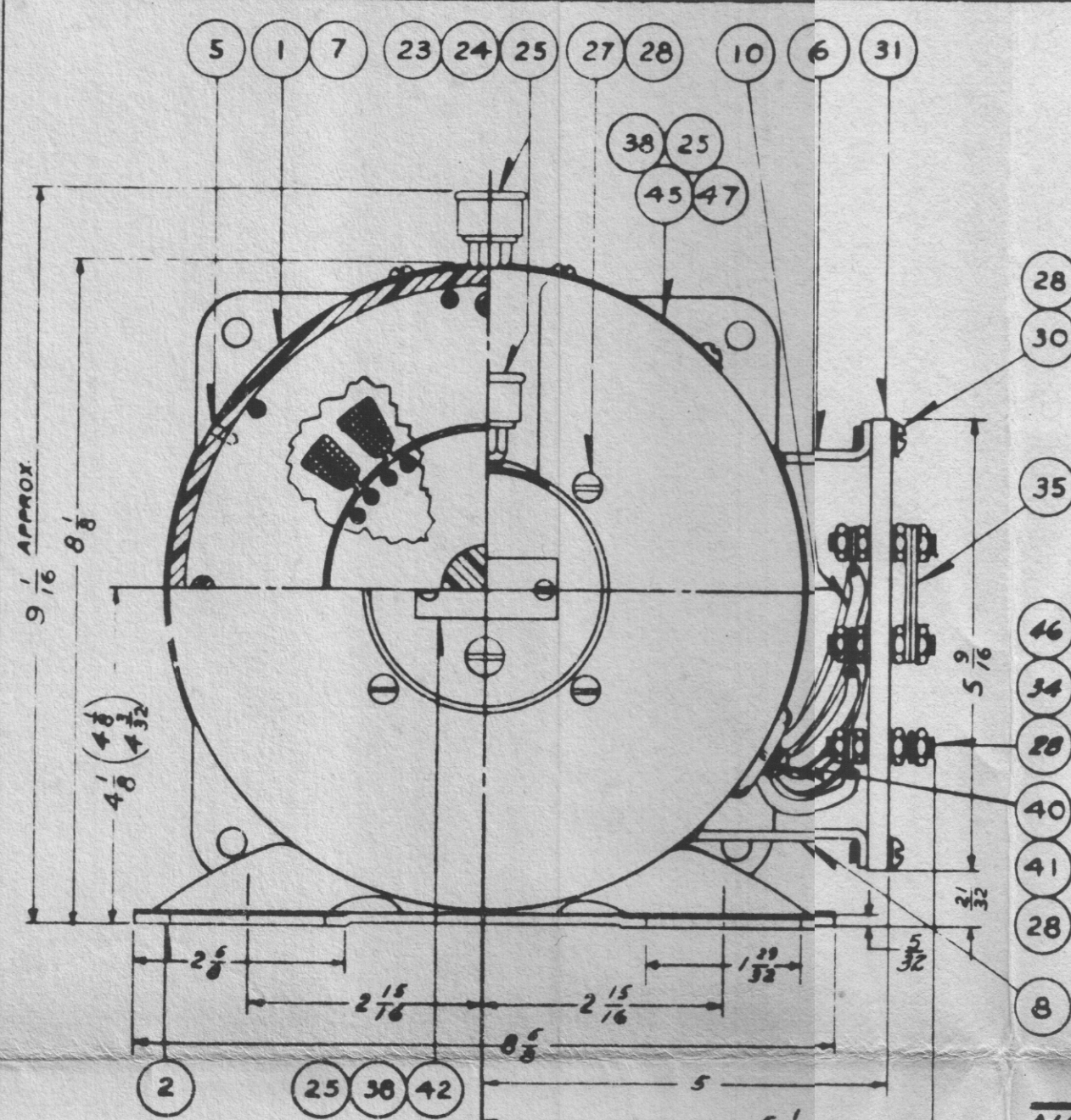

FOR COUPLING DATA SEE DWG. 38-J-802

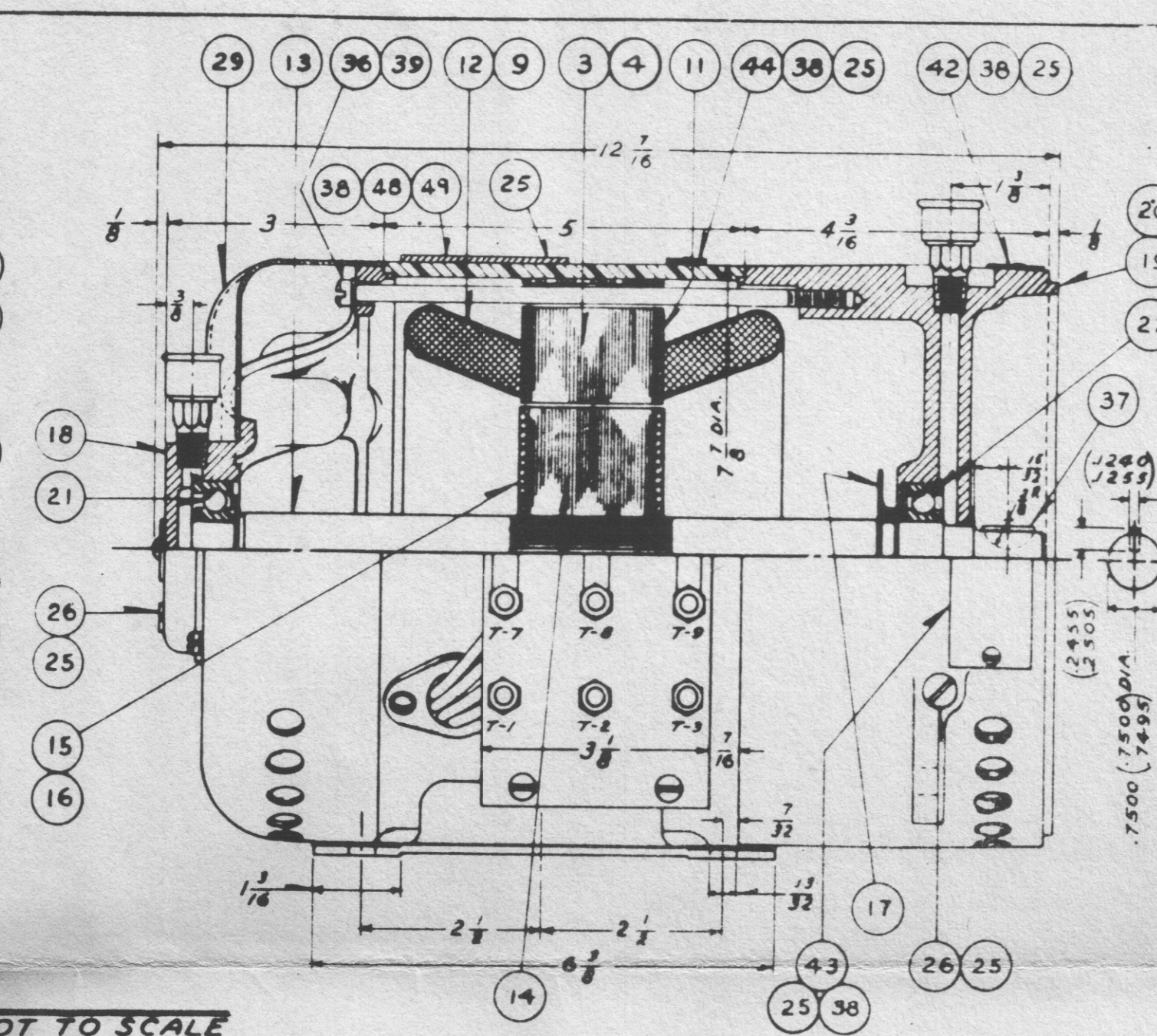

NOT TO SCALE

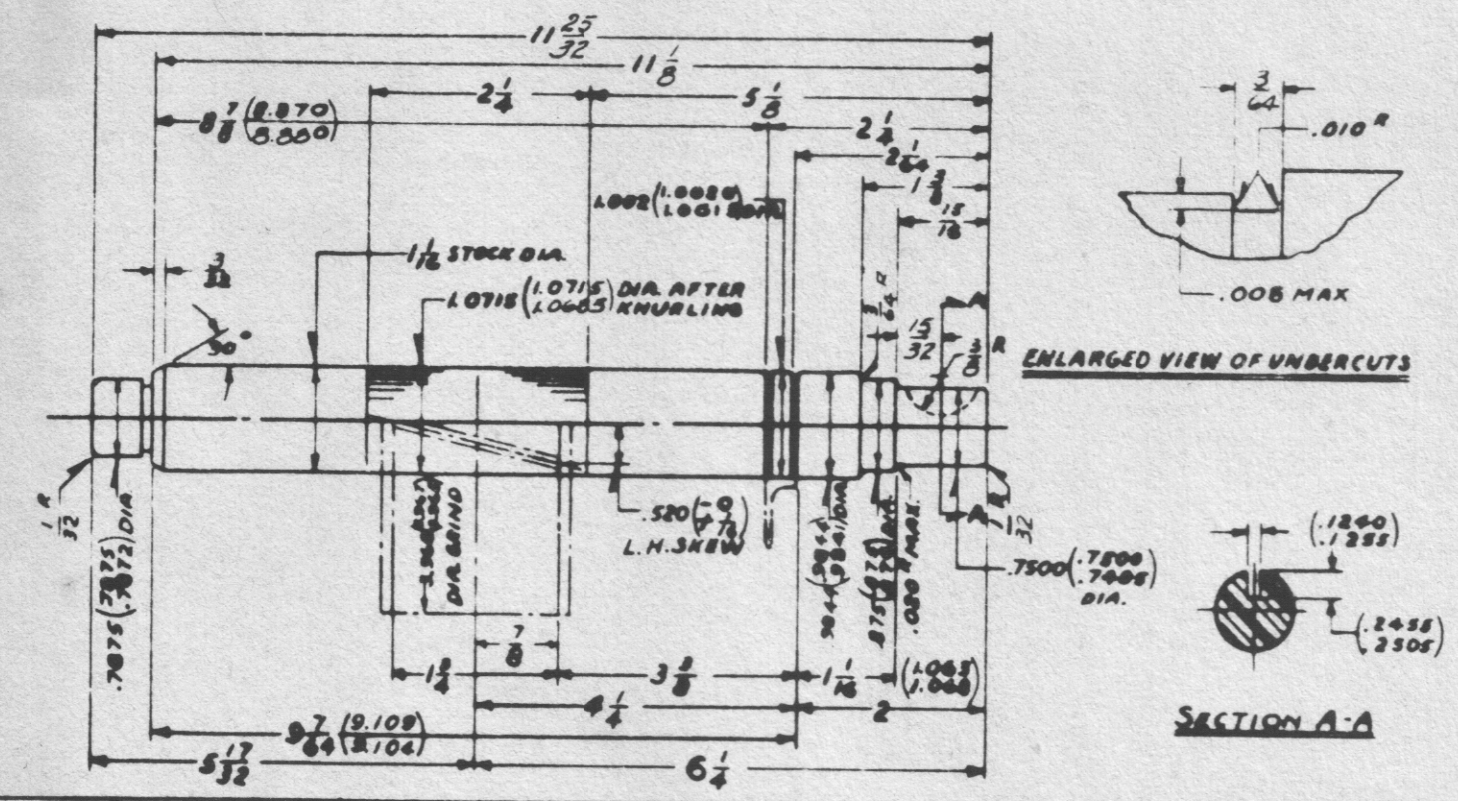


LIST OF MATERIAL

QUANTITIES ARE FOR ONE MACHINE

| PIECE NO. | NAME OF PIECE | NO. REQ'D | MAT'L | NAVY SPEC. LATEST ISSUE | STYLE NO. | REMARKS | CONTRACTORS DRAWING NO. |
|---|---|---|---|---|---|---|---|
| 1 | FRAME | 1 | SH.S. | 47S11 | 858212 | REF. ASSY 1-C-9033 | 52-B-343 |
| 2 | FOOT | 1 | SH.S. | 47S11 | 987865 | | 59-B-640 |
| 3 | PRIMARY PUNCHING | 1 SET | ELEC. SH.S. | NOTE #2 | 1187805 | 12.08 LBS. | 5-B-1620 |
| 4 | RIVET | 8 | S. | 46S17 | 186708 | | 306119 |
| 5 | PIN | 2 | S. | 46S17 | 416711 | | 332116 |
| 6 | TERMINAL BOARD BRACKET | 1 | SH.S. | 47S11 | IT. #2 | TOP | 1-C-9033 |
| 7 | PIN | 1 | S. | 46S17 | IT. #3 | | 32-D-402 |
| 8 | TERMINAL BOARD BRACKET | 1 | SH.S. | 47S11 | IT. #1 | BOTTOM | 1-C-9033 |
| 9 | STATOR INSULATION MATERIAL | 1 | SEE INS. MATL. | | GROUP #2 | | 87-D-957 |
| 10 | LEAD | 1 | FIX. WIRE | 15C1 | GROUP #1 | 9 LEADS* | 1-C-9047 |
| 11 | STATOR INSULATING PCHG. | 2 | FIBRE | 17F5 | 848451 | | 37-B-640 |
| 12 | STATOR COIL | 24 | S.C.C.EN. COP. WIRE | 15W2 | IT. #1 | 4.75 LBS | L-383350 |
| 13 | SHAFT | 1 | S. BAR | 46-S-671 FS-X1336 | IT. #1 | REF. ASSY 7-B-8442 | 7-B-8442 |
| 14 | ROTOR PUNCHING | 1 SET | ELEC. SH.S. | NOTE #2 | 1187848 | 4.26 LBS. | 96-C-557 |
| 15 | RESISTANCE RING | 2 | COPPER | 47C2 | 1127617 | | 47-B-514 |
| 16 | CONDUCTOR | 36 | COPPER | 47C2 | IT. #25 | | 831233 |
| 17 | OIL FLINGER | 1 | S. | 46S17 | IT. #1 | | 6-D-6783 |
| 18 | FRONT BRACKET | 1 | M.I. | 46I8 TYPE B | IT. #2 | NOT GALVANIZED | 7-A-5635 |
| 19 | REAR BRACKET | 1 | M.I. | 46I8 TYPE B | IT. #1 | NOT GALVANIZED | 7-A-5636 |
| 20 | PIN | 1 | S. | 46S17 | IT. #3 | | 32-D-402 |
| 21 | FRONT BALL BEARING | 1 | S. | 42B5 | IT. #5 | #204 SINGLE SEAL | 7-D-8544 |
| 22 | REAR BALL BEARING | 1 | S. | 42B5 | IT. #6 | #205 SINGLE SEAL | 7-D-8544 |
| 23 | GREASE CUP | 2 | S. | NOTE #7 | IT. #1 | CADMIUM PLATED | 6-D-6415 |
| 24 | BALL BEARING GREASE | 1 SET | GREASE | 14L3 GRADE B | | #7754-2 | |
| 25 | CEMENT | 1 SET | ENAMEL | NOTE #3 | | #672-1 | |
| 26 | 1/8 IN. PIPE PLUG | 2 | S. | 46S17 | 652874 | CADMIUM PLATED | 816483 |
| 27 | .190-32X1/4 LG. FIL. HD. M. SCREW | 4 | S. | 42S5 | | CADMIUM PLATED | |
| 28 | .190 SHAKEPROOF LOCKWASHER | 46 | S. | AC-936A10 | IT. #5 | CADMIUM OR ZINC PLATED | 5-D-4150 |
| 29 | END COVER | 1 | S. | 47S11 | IT. #1 | | 7-B-8426 |
| 30 | .190-32X1/2 LG. RD. HD. M. SCREW | 4 | S. | 42S5 | | CADMIUM PLATED | |
| 31 | TERMINAL BOARD | 1 | MICARTA | 17P5 | IT. #1 | REF. ASSY 7-B-8458 | 7-B-8440 |
| 32 | | | | | | | |
| 33 | | | | | | | |
| 34 | .190-32 HEX. M. SCR. NUT | 36 | B. | 43B11 | | NICKEL PLATED | |
| 35 | LINK | 5 | B. | 47B2 | IT. #3 | NICKEL PLATED | 1-C-9033 |
| 36 | 1/4 LOCK WASHER | 4 | NI-SH | 46-B-27 | 570065 | NON-CORR. | 860077 |
| 37 | WOODRUFF KEY | 1 | S. | #406 | | | |
| 38 | .112-40X1/4 LG. RD. HD. M. SCREW | 16 | S. | 42S5 | | CADMIUM PLATED | |
| 39 | 1/4-20X5/8 LG. FIL. HD. SCREW | 4 | S. | 43B11 | IT. #19 | CADMIUM PLATED | 816121 |
| 40 | .190-32X1/2 LG. RD. HD. M. SCREW | 2 | S. | 42S5 | | CADMIUM PLATED | |
| 41 | LEAD BUSHING | 1 | MOLDARTA | 17P4 | IT. #1 | | 7-D-8526 |
| 42 | NAME PLATE (LUBRICATION) | 2 | SH.B. | 42N2 | | #34713 | |
| 43 | NAME PLATE (CONNECTION) | 1 | SH.B. | 42N2 | | #34714 | |
| 44 | NAME PLATE (SERIAL NO.) | 1 | SH.S. | 42N2 | | #36748 | |
| 45 | NAME PLATE (MOTOR) | 1 | ALUM. ALLOY | 42N2 | TDE-2 | #40364 | |
| 46 | STUD (1 1/2 LG.) .190-32 | 9 | B | 43B11 | 361701 | NICKEL PLATED | 801312 |
| 47 | NAME PLATE (MOTOR) | 1 | ALUM. ALLOY | 42N2 | TDE-2 | #40587 | |
| 48 | NAME PLATE (SET) | 1 | ALUM. ALLOY | 42N2 | TDE-2 | #40802 | |
| 49 | NAME PLATE (SET) | 1 | ALUM. ALLOY | 42N2 | TDE-2 | #40803 | |
| 50 | | | | | | | |
| 51 | | | | | | | |
| 52 | | | | | | | |
| 53 | | | | | | | |
| 54 | | | | | | | |
| 55 | | | | | | | |
| 56 | | | | | | | |
| 57 | | | | | | | |
| 58 | | | | | | | |
| 59 | | | | | | | |
| 60 | | | | | | | |

* LEADS TAGGED T1-T2-T3-T4-T5-T6-T7-T8-T9

LIST OF SPARE PARTS AND TOOLS (PER VESSEL)
REPRODUCED FROM MFRS. DRAWING NO. *38-J-800* BUREAU NO. *14RE21J1634A*
NAMES AND NUMBERS OF VESSELS: SEE TITLE BLOCK
APPLICATION *DRIVING GENERATOR ON "TDE-2— RADIO TRANSMITTER*
NAVY CONTRACT NO. *SEE TITLE BLOCK* APPLIANCE—A. C. MOTOR *ON MOT.-GEN.*
SHIPBUILDER'S ORDER NO. *SEE TITLE BLOCK* MANUFACTURER W. E. & M. CO.

| ITEM NO. | NUMBER OF SETS | NUMBER PER SET | NAME OF PART OR TOOL | MANUFACTURER'S DATA: CATALOG OR SERIAL ORDERING DATA | MFRS. DRAWING AND PIECE NUMBER: PC. | DWG. NO. | BUREAU DRAWING AND PIECE NO.: DWG. NO. |
|---|---|---|---|---|---|---|---|
| 1 | 1 | 1 | FRONT BALL BEARING NO. 8504 (0-621) | D-7-D-8544 IT. #5 | 21 | 38-J-800 | |
| 2 | 1 | 1 | REAR BALL BEARING NO. 8505 (0-622) | D-7-D-8544 IT. #6 | 22 | 38-J-800 | |

*MOTOR* SPARE PARTS S. # *1171151-A*
SPARE PARTS FOR USE WITH— *CAY 21853*
TYPE *FS*. FRAME # *186 SEMI-ENCLOSED*
*1* H.P. *3* PHASE *60* CYCLE *220/440* VOLT.
*3450* RPM. A.C. MOTOR S. # *957986*
CASE NO.
GROSS WT. NET WT. *1 LB.*

LEGEND—
S—STYLE NUMBER
D—DRAWING NUMBER
L—ELECTRICAL SPECIFICATION NUMBER
NOTE:—SUFFIX LETTERS IN CONNECTION WITH IDENTIFYING NUMBERS FOR SPARE PARTS ARE FOR THE INFORMATION OF THE MANUFACTURER AND WILL NOT AFFECT THE MATERIAL FURNISHED ON FUTURE ORDERS.
WHEN REORDERING ALWAYS REFER TO MACHINE SERIAL NUMBER
NO. OF SHEETS 1 SHEET NO. 1

FOR EXTENSIONS SEE TABLE ON DWG. 38-J-802

| NO. | DESCRIPTION | AUTHORITY | APP'D. | DATE |
|---|---|---|---|---|
| | | | | |

ALTERATIONS

WESTINGHOUSE ELECTRIC & MFG., CO.
LIMA WORKS, LIMA, OHIO, U. S. A.

DWG. NO. **38-J-800** SHEET *1* OF *1* SHEET
DRAWN BY *C.R.* DATE *8-5-44* INSPECTED BY DATE
TRACED BY *C.R.* DATE *"* APPROVED BY DATE
SCALE N.T.S. REPRODUCTION OF FINAL PLANS MADE
—DIMENSIONS IN INCHES—

PLAN EXAMINED & FOUND SATISFACTORY

BU. SHIPS APPROVAL LTR. INM APPROVAL LTR.

DATE INSPECTOR OF NAVAL MATERIAL

OUTLINE & ASSEMBLY (OR SPECIFICATIONS FOR)

**TYPE CAY21853 A.C MOTOR**
*1 H.P., 3450 RPM, 220/440 VOLTS, 3/1.5 AMPS, 60 CYC, 3 PH.*
*A UNIT OF MODEL TDE-2 RADIO TRANSMITTER*

CONTRACT NUMBER *NXss 33634* *NXsr 38682* CONTRACT DATE *6-30-43* *10-6-43*

BUREAU OF SHIPS PLAN NUMBER
*14-RE-21-J-1634-A*

**CAY-T-160-8—Motor, Type CAY-21853, 220/440 V. 3 Phase, 60 Cycle, a Unit of Type CAY-21850 Rectifier Power Unit for Navy Model TDE-2. Outline, Winding Data and Specifications. (Dwg. 38-J-800)**

## DESCRIPTIVE DATA

### (A) IDENTIFICATION

MANUFACTURER: WESTINGHOUSE ELEC. & MFG. CO.
MANUFACTURER'S TYPE FK CLASS A FRAME NO. E186 - E34
NAVY CONTRACT OR SHIPBUILDER'S ORDER SEE TITLE BLOCK DATE
INSTALLED ON (SEE TITLE BLOCK FOR VESSELS INVOLVED)
FOR USE WITH CAY21859, CAY21851, CAY21852 & CAY211031 MOTORS.
MANUFACTURER OF DRIVEN AUXILIARY WESTINGHOUSE ELEC. & MFG. CO.
REFERENCE SPECIFICATIONS
THE GENERATORS DESCRIBED HEREUNDER WILL CONFORM STRICTLY WITH NAVY DEPARTMENT SPECIFICATION 17 G 7 INT(GENERATORS D.C. FOR SHIPBOARD USE) OF MAR 1, 1939 AND OF THE SPECIFICATIONS FOR THE VESSEL. EXCEPT AS SPECIFICALLY ENUMERATED BELOW.
REFERENCE DRAWINGS

| TITLE OF DWG. | MANUFACTURER'S NO. | BU. SHIPS NO. |
|---|---|---|
| | | |
| | | |
| | | |

### (B) MANUFACTURER'S DESCRIPTIVE DATA

GENERATOR CLASSIFICATION
DEGREE OF ENCLOSURE SEMI-ENCLOSED SERVICE-NAVY A
METHOD OF COOLING SELF VENTILATED
SPEED CLASS CONSTANT DUTY CLASSIFICATION: CONTINUOUS
VOLTAGE 2000/550 R.P.M. 3450 KW .493
TYPE OF WINDING COMPOUND AMPERES .175 — .26
AMBIENT TEMP 40 °C. CLASS OF INSULATION A
TEMPERATURE RISE, TABLE III METHOD #1 & #2 CONCURRENTLY
MOUNTING (HORIZONTAL OR VERTICAL) HORIZONTAL
DATA MARKED * TO APPEAR ON NAME PLATE.

| PERFORMANCE | EFFICIENCY | AMPERES 2000 V | 550 V |
|---|---|---|---|
| (A) GUARANTEED | 4/4 65% | .175 | .260 |
| (B) GUARANTEED | 3/4 62% | .131 | .195 |
| (C) GUARANTEED | 1/2 58% | .0875 | .130 |
| (D) | 1/4 | | |

SPECIAL ATTACHMENTS: NONE

WEIGHTS
(A) GENERATOR COMPLETE 74 LBS. (B) ROTOR COMPLETE 11½ LBS.
(C) ALL SPARES BOXED, INCLUDING CONTROL SPARES ____ LBS.
SHAFT, BEARINGS & LUBRICATION
(A) SHAFT MATERIAL COLD DRAWN CARBON STEEL (B) TYPE OF BEARINGS BALL
(C) BALL BEARING IDENTIFICATION SAE 204 & 205
NAVY TYPE A, CLASS 4, GRADE II MANUFACTURER'S SINGLE SEAL
(D) TYPE OF LUBRICATION GREASE NAVY SYMBOL 14-L-3 GRADE "B"
(E) BEARINGS SHOWN ARE APPROVED BY BALL BEARING MANUFACTURER AS REQUIRED BY PAR. 7 (c), APPENDIX I OF NAVY SPEC. 42-B-5.
BRG. M'F'G. ____ SIGNED ____
POLES
MAIN (A) NO. 2 (B) AIR GAP NOMINAL .030 IN. SINGLE
COMM. (C) NO. ____ (D) AIR GAP NOMINAL ____
ARMATURE
(A) DIAM. 3.375 (B) CORE LENGTH 3⅛
COMMUTATOR
(A) DIAM. 2⅜ (B) LENGTH ½ (C) WEARING DEPTH 1/16 ON DIA.
(D) 1/32 UNDERCUT (E) INSUL: BET. BARS MICA TO GROUND MICA
BRUSHES
(A) NO. OF STUDS 4 (B) NO. OF BRUSHES PER STUD 1 GRADE NM6165
(C) DIMENSIONS: LENGTH 1" WIDTH .279 THICKNESS .216
(D) GRADE: NAVY 0 MANUFACTURER MORGANITE BRUSH CO.

CAPACITORS

| PIECE NO. | NAVY SYMBOL NO. | MANUFACTURER | MFG'R'S DESIGNATION |
|---|---|---|---|
| 81-103-106 | C-633, C-634 | CORNELL DUBILIER | 3AS 21010 |
| 89-104-105 | C-631, C-632 | CORNELL DUBILIER | 3AS 51010 |

THE POWER SUPPLY FOR EACH MOTOR DRIVING THIS GENERATOR IS AS TABULATED BELOW:—

| STYLE NO. | DRAWING NO. | POWER SUPPLY FOR MOTOR |
|---|---|---|
| 957985 | 36-J-140 | 220/440 VOLT 3 PHASE 60 CYCLES. |
| 967987 | 36-J-143 | 115 VOLT D.C. |
| 957989 | 36-J-146 | 230 VOLT D.C. |
| 1171118 | 36-J-156 | 115/230 VOLT A.C. SINGLE PH. 60 CYCLE |

### (C) TYPE TESTS

TO BE MADE ONLY ON SELECTED MOTORS REFER TO SPECIFICATION 17-G-7
EFFECTIVENESS OF ENCLOSURE O.K.

EFFICIENCY
FULL LOAD I²R LOSSES IN WINDINGS 79.14
BEARING & BRUSH FRICTION AND WINDAGE 3.7
CORE LOSSES 6.16
STRAY LOAD LOSSES
CALCULATED EFFICIENCY AT 1 2 LOAD 57.9%
3 4 LOAD 64.0%
4 4 LOAD 68.3%

RESISTANCE

| | | ARM. | SH. FLD | SER. FLD | COMM. FLD |
|---|---|---|---|---|---|
| | 26 °C | H.T. .188 L.T. .00188 | 2545 | H.T. .133 L.T. .00133 | - |
| | 51 °C | H.T. .205 L.T. .00205 | 2900 | H.T. .145 L.T. .00145 | |

VOLTAGE REGULATION

| APPROXIMATE PERCENT OF LOAD ON GENERATOR | GENERATOR VOLTAGE HIGH | LOW |
|---|---|---|
| 125% | 1970 | 552 |
| 100% | 2000 | 560 |
| 75% | 2015 | 565 |
| 50% | 2030 | 567 |
| 25% | 2045 | 572 |
| 0% | 2045 | 574 |

### HEATING

NORMAL LOAD HEAT RUN

| TIME | LINE VOLTS | LINE AMPS | SHUNT FLD. VOLTS | SHUNT FLD. AMPS | TEMPERATURE NO. 1 | NO. 2 | NO. 3 | NO. 4 | NO. 5 | NO. 6 | ROOM |
|---|---|---|---|---|---|---|---|---|---|---|---|
| 1:00 | 2000 / 550 | .175 / .26 | | | 28 | | 28 | | 28 | | 28 |
| 1:30 | " | " | | | 39 | | 40 | | 36 | | 29 |
| 2:00 | " | " | | | 43 | | 44 | | 42 | | 28 |
| 2:30 | " | " | | | 45 | | 46 | | 44 | | 27 |
| 3:00 | " | " | | | 46 | | 47 | | 46 | | 26 |
| 3:30 | " | " | | | 47 | | 48 | | 47 | | 26 |
| 4:00 | " | " | | | 48 | | 49 | | 48 | | 27 |
| | | | | | | | | | | | |
| TEMP. RISE DEGREES C. WHILE RUNNING | | | | | 21°C | | 22°C | | 21°C | | |
| TEMP. RISE DEGREES C. AFTER SHUTDOWN | | | | | 27°C | | 26°C | | 27°C | | |

LOCATION OF THE NUMBER IN THE TABLE (NORMAL LOAD HEAT RUN) ABOVE SHOULD BE INDICATED
NO. 1 FLD. NO. 2 ____ NO. 3 BRG. NO. 4 ____ NO. 5 FRAME NO. 6 ____
SHUTDOWN TEMPERATURES
ARMATURE CORE ____ COMMUTATOR ____
ARMATURE WINDING ____ FRONT BRG. 40 REAR BRG. 51
OVERSPEED 4300
DIELECTRIC STRENGTH H.T. 7000 VOLTS L.T. 3000 VOLTS
INSULATION RESISTANCE 40 MEGOHMS AT 51°C ; 70 MEGOHMS AT 26°C

INSPECTOR'S SIGNATURE ____
OFFICE ____ DATE ____

### (D) CONCLUSION

IN VIEW OF THE TEST DATA SHOWN ABOVE AND THE SATISFACTORY HORSEPOWER CAPACITY, SPEED CHARACTERISTICS, POWER FACTORS AND EFFICIENCIES WHEN DRIVING THE CONNECTED AUXILIARY THROUGHOUT ITS RANGE OF SPECIFIED OPERATING CONDITIONS AS REPORTED BY I. N. M. ____ LETTER ____ OF ____ 194__ THE MOTORS ARE CONSIDERED AS MEETING SPECIFICATION AND CONTRACT REQUIREMENTS AND SUITABLE FOR THE PURPOSE INTENDED EXCEPT ____

INSPECTOR'S SIGNATURE ____
OFFICE ____ DATE ____

## NOTES

#1 NAVY DEPARTMENT MATERIAL SPECIFICATION OF ISSUE IN EFFECT MARCH 1, 1939 ARE APPLICABLE EXCEPTING
#2 #10 THREADS (.190 DIA., 32 THDS. PER INCH) TO BE IN ACCORDANCE WITH NATIONAL FINE THREAD SERIES PER 17GTINT PAR. C 10 C. ALL OTHER THREADS TO BE IN ACCORDANCE WITH NATIONAL COARSE THD SERIES PER 17G7 INT. PAR C 10 D UNLESS OTHERWISE SPECIFIED.
#3 CADMIUM PLATING TO BE IN ACCORDANCE WITH NAVY DEPT. SPEC. 46 P1
#4 ALL METAL SURFACES INSIDE OF MOTOR PROTECTED WITH A COAT OF ZINC CHROMATE PRIMER. (WESTINGHOUSE #212-T) (NAVY AERO. SPEC P27-b)
#5 THIS MATERIAL IS EQUIVALENT, TO OR BETTER THAN THE COMMERCIAL GRADE KNOWN AS SILICON STEEL, ELEC GRADE
#6 A MIXTURE OF SHELLAC AND GUMS IN ALCOHOL WITH A PLASTICIZER AND LOADED WITH RED IRON OXIDE. (WESTINGHOUSE #672-1)
#7 A MOLDED FIBRE TUBE. (WESTINGHOUSE #5857-2)
#8 A STANDARD BLACK BAKELITE MOLDED OVER A THREADED BRASS INSERT.
#9 THIS CUP WILL MEET NAVY SPEC. 45C 7, TYPE D, EXCEPT CUP WILL BE MADE OF STEEL AND CADMIUM PLATED PER NAVY SPEC. 46 P1 IN LINE WITH CHIEF OF BU. SHIPS LETTER S63-1(3660) EN 28/A2-11 DATED 2-7-42. THIS CUP IS CATALOG STYLE #SA-7403 SIZE 000, AMERICAN STAMPING CO, BATTLE CREEK, MICH.
#10 A HIGH STRENGTH, SINTERED MOLDED CERAMIC (WESTINGHOUSE "PRESTITE")
#11 (SEE BOTTOM, THIS COLUMN)

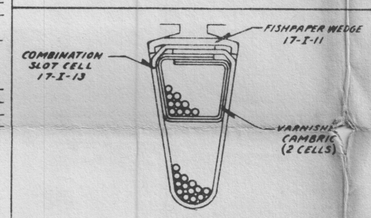

ARMATURE SLOT

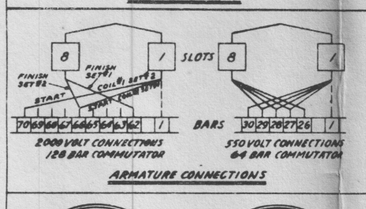

ARMATURE CONNECTIONS

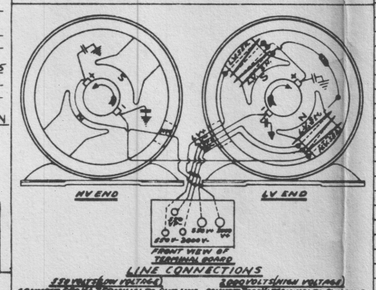

LINE CONNECTIONS

FOR 2000 VOLT (HIGH VOLTAGE) CONNECT 2000 V. TERMINAL TO PLUS LINE. CONNECT 550 V. TERMINAL TO MINUS LINE. CONNECT 2000 V. TERMINAL TO FIELD LEAD. CONNECT START AND FINISH TO 550 V. TERMINAL.
FOR 550 VOLT (LOW VOLTAGE) CONNECT 2000 V. TERMINAL TO PLUS LINE. CONNECT 550 V. TERMINAL TO MINUS LINE. CONNECT 2000 V. TERMINAL TO FIELD AND START. CONNECT 550 V. TERMINAL TO START AND FINISH TO FIELD. (IF NOT ALREADY CONNECTED FOR 2000 V.)

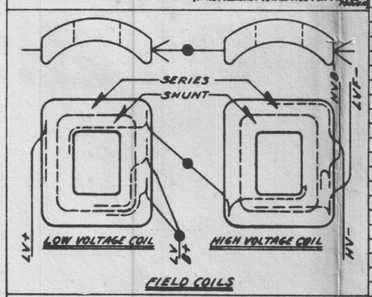

FIELD COILS

## —EXCEPTIONS TO NAVY SPEC. 17G7—

#1 E-3a THE FRAME RING IS MADE OF SEMI-STEEL INSTEAD OF STEEL.
#2 C-7c(6) PREHEATING OF FIELD COILS AND ARMATURE BEFORE VARNISH DIPPING IS OMITTED.
#3 WESTINGHOUSE #6109 & #7669 VARNISH HEAT ENDURANCE TEST IS 250 HOURS. (GRADE B) VARNISH NAVY SPEC. 52 V 13 REQUIRES 500 HOURS.
#4 E-12c BRUSHHOLDERS ARE CARTRIDGE TYPE, NOT ADJUSTABLE.
#5 E-9c COMMUTATOR IS SECURED TO SHAFT BY PRESS FIT.
#6 E-8d WEARING DEPTH IS 1/16 IN. ON DIAMETER.
#7 E-6b BEARINGS ARE SINGLE SEALED WITH NO SUPPLEMENTARY HOUSING SHIELD. A ROTATING OIL FLINGER IS ASSEMBLED ON THE SHAFT ADJACENT TO THE BEARING.
#8 CREEPAGE DISTANCE TO GROUND ⅜ IN.
DISTANCE THRU AIR TO GROUND ⅜ IN.
CREEPAGE DISTANCE TO OPPOSITE POLARITY ⅜ IN.
DISTANCE THRU AIR TO OPPOSITE POLARITY ⅜ IN.
#9 E-3a NO EYEBOLTS ARE PROVIDED FOR LIFTING OF THE GENERATOR
#10 E-13a BRUSHES ARE GRADE NM 6165 MANUFACTURED BY MORGANITE BRUSH CO.
#11 E-7b ARMATURE LAMINATIONS ARE NOT CLAMPED.
#12

## —NOTES CONTINUED—

#11 THIS MATERIAL IS BRIGHT ANNEALED, HALF HARD, COLD ROLLED CARBON-STEEL (A.I.S.I. SPEC. # C-1070) AND IS ZINC PLATED TO MEET (NAVY SPEC. # 46P2) OF ISSUE APRIL 1, 1938.

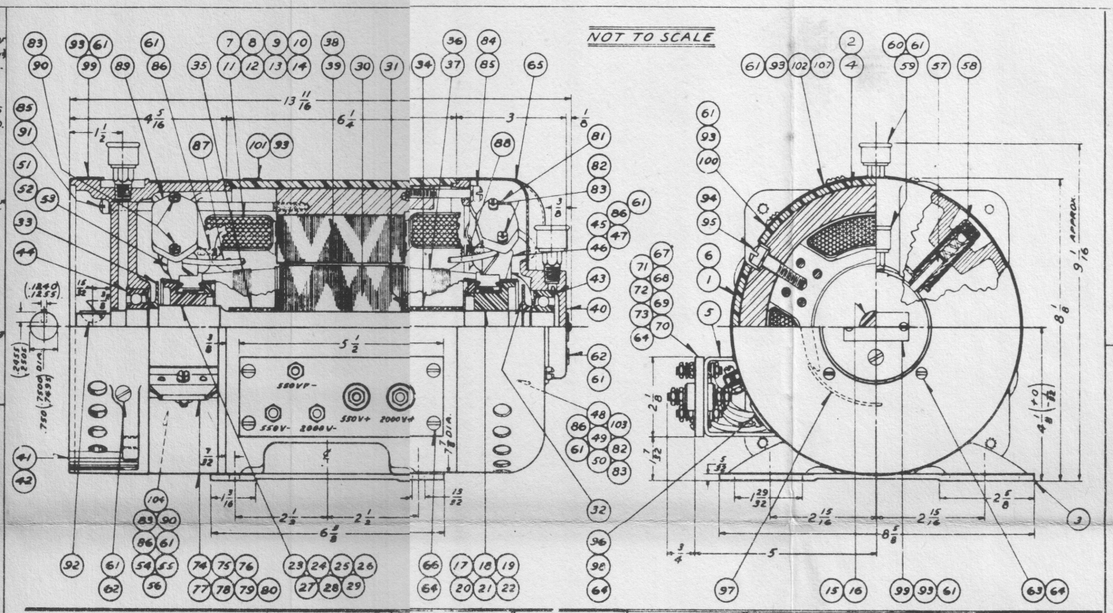


FOR COUPLING DATA: SEE DWG. #36-J-142 FOR S# 957985 — DWG #36-J-145 FOR S# 957987 — DWG #36-J-148 FOR S# 957989 — DWG #36-J-160 FOR S# 1171118

## LIST OF MATERIAL

QUANTITIES ARE FOR ONE MACHINE

| PIECE NO | NAME OF PIECE | NO REQ'D | MAT'L | NAVY SPEC LATEST ISSUE | STYLE NO. | REMARKS | CONTRACTORS DRAWING NO. |
|---|---|---|---|---|---|---|---|
| 1 | FRAME | 1 | SH.S. | 47S11 | 1T#1 | | 6-D-9598 |
| 2 | FRAME RING | 1 | N.I.C.A. | 46I5 | 1T#1 | | 7-B-8435 |
| 3 | FOOT | 1 | SH.S | 47S11 | 987885 | | 59-B-690 |
| 4 | PIN | 2 | S. | 46S17 | 4J6711 | | 392116 |
| 5 | TERMINAL BOARD BRACKET | 2 | SH.S. | 47S11 | 1T#1 | | 7-D-8503 |
| 6 | PIN | 1 | S. | 46S17 | 1T#3 | | 32-D-402 |
| 7 | FIELD WINDING | 1 | B.&S. COTTON COVERED WIRE | 15W2 | ITS#3 THIS | REF. ABOVE 7-B-8424 | L-407785 |
| 8 | SPLICE LEAD | 6 | N.I.C.A. RUBBER INSULATED WIRE | 15C1 | 1T#4 | | 7-D-8573 |
| 9 | LEAD | 2 | N.I.C.A. RUBBER INSULATED WIRE | 15C1 | 1T#7 | | 6-D-6315 |
| 10 | LEAD COMP. | 1 | N.I.C.A. RUBBER INSULATED WIRE | 15C1 | ASSY#2 | LV F-BLACK | 6-D-6788 |
| 11 | LEAD COMP. | 1 | N.I.C.A. RUBBER INSULATED WIRE | 15C1 | ASSY#3 | HV-WHITE | 6-D-6788 |
| 12 | LEAD COMP. | 1 | N.I.C.A. RUBBER INSULATED WIRE | 15C1 | ASSY#1 | LV+ BLACK | 6-D-6788 |
| 13 | LEAD COMP. | 1 | N.I.C.A. RUBBER INSULATED WIRE | 15C1 | ASSY#1 | BLACK | 6-D-6790 |
| 14 | LEAD COMP. | 1 | N.I.C.A. RUBBER INSULATED WIRE | 15C1 | ASSY#5 | WHITE | 5-D-7128 |
| 15 | ARMATURE COMPLETE | REF. | | PCS.#6 & #37 | ASSY#1 | | 7-B-8426 |
| 16 | SHAFT | 1 | S.BAR | 46S17 | 1T#1 | | 7-B-8424 |
| 17 | V-RING | 1 | S.BAR | 46S17 | 1T#2 | REF. ABOVE 7-B-8424 | 7-B-8454 |
| 18 | V-RING | 1 | MICA | 17M5 | 1T#3 | | 7-B-8454 |
| 19 | V-RING | 1 | MICA | L7M5 | 1T#4 | | 7-B-8454 |
| 20 | STRIP | 64 | MICA | 17M5 | 1T#7 | | 7-B-8454 |
| 21 | BUSHING | 1 | S.BAR | 46S17 | 1T#9 | | 7-B-8454 |
| 22 | COMMUTATOR BAR | 64 | CU. | 47C2 | 1T#10 | LV | 7-B-8454 |
| 23 | BUSHING | 1 | S.BAR | 46S17 | 1T#1 | REF. ABOVE 7-B-8424 | 7-B-8454 |
| 24 | V-RING | 1 | S.BAR | 46S17 | 1T#2 | | 7-B-8454 |
| 25 | V-RING | 1 | MICA | 17M5 | 1T#3 | | 7-B-8454 |
| 26 | V-RING | 1 | MICA | 17M5 | 1T#4 | | 7-B-8454 |
| 27 | COMMUTATOR BAR | 128 | CU | 47C2 | 1T#5 | HV | 7-B-8454 |
| 28 | STRIP | 64 | MICA | 17M5 | 1T#6 | | 7-B-8454 |
| 29 | STRIP | 64 | MICA | 17M5 | 1T#7 | | 7-B-8454 |
| 30 | ARMATURE PUNCHING | 1SET | ELEC. GRADE | NAVY SPEC. #5 | ST3506 | 46 LBS. | 350078 |
| 31 | ARMATURE INSULATING PCNG. | 4 | FIBRE | 17P5 | 1T#13 | | 350079 |
| 32 | OIL FLINGER | 1 | S.BAR | 46S17 | 1T#2 | | 6-D-6783 |
| 33 | OIL FLINGER | 1 | S.BAR | 46S17 | 1T#1 | | 6-D-6783 |
| 34 | INSULATING BUSHING | 1 | FIBRE | 17P5 | 406839 | | 8-D-6008 |
| 35 | INSULATING BUSHING | 1 | FIBRE | 17P5 | 406867 | | 8-D-6008 |
| 36 | ARMATURE INSULATION MAT'L | 1 | MIL. SPEC. CLASS 'B' INSULATION | | GROUP#1 | | 1-D-2859 |
| 37 | ARMATURE WINDING | 1 | COTTON COVERED WIRE | 15W2 | ITS#1-2 | | L-407785 |
| 38 | POLE PUNCHING | 2-SETS | SH.S. | 47S11 | 277179 | 9.81 LBS. PER SET | 356295 |
| 39 | RIVET | 8 | S.BAR | 46S13 | 1T#21 | 4 PER POLE | 8-D-6315 |
| 40 | FRONT BRACKET LV | 1 | M.I. | 46I8 CLASS 'B' | 1T#1 | NOT REQ'D ON 7-A-5632 | 7-A-5632 |
| 41 | REAR BRACKET HV | 1 | M.I. | 46I8 CLASS 'B' | 1T#1 | REF. ABOVE 7-A-5632 | 7-A-5634 |
| 42 | PIN | 1 | S | 46S17 | 1T#3 | REF. ABOVE 7-B-8424 | 32-D-402 |
| 43 | FRONT BALL BEARING | 1 | S | 42B5 | 1T#5 | REF. ABOVE 7-B-8424 | 7-D-8544 |
| 44 | REAR BALL BEARING | 1 | S | 42B5 | 1T#6 | REF. ABOVE 7-B-8424 | 7-D-8544 |
| 45 | INSERT | 1 | B | 47B2 | 1T#1 | REF. ABOVE 7-B-8430 | 7-B-8430 |
| 46 | TERMINAL | 1 | B | 47B2 | 1T#3 | LV-3 | 7-B-8430 |
| 47 | BUSHING | 1 | FIBRE | 17P5 | 1T#4 | REF. ABOVE 7-B-8430 | 7-B-8430 |
| 48 | INSERT | 1 | B | 47B2 | 1T#1 | REF. ABOVE 7-B-8430 | 7-B-8430 |
| 49 | TERMINAL | 1 | B | 47B2 | 1T#2 | LV-4 | 7-B-8430 |
| 50 | BUSHING | 1 | FIBRE | 17P5 | 1T#4 | REF. ABOVE 7-B-8430 | 7-B-8430 |
| 51 | INSERT | 1 | B | 47B2 | 1T#1 | REF. ABOVE 7-B-8430 | 7-B-8430 |
| 52 | TERMINAL | 1 | B | 47B2 | 1T#3 | HV-4 | 7-B-8431 |
| 53 | BUSHING | 1 | FIBRE | 17P5 | 1T#4 | REF. ABOVE 7-B-8430 | 7-B-8430 |
| 54 | INSERT | 1 | B | 47B2 | 1T#1 | REF. ABOVE 7-B-8430 | 7-B-8430 |
| 55 | TERMINAL | 1 | B | 47B2 | 1T#2 | HV-3 | 7-B-8431 |
| 56 | BUSHING | 1 | FIBRE | 17P5 | 1T#4 | REF. ABOVE 7-B-8424 | 7-B-8430 |
| 57 | CARBON COMPLETE | 4 | CARBON | 17B8 | 1T#4 | NM-6165 | 5-D-4331 |
| 58 | BRUSH HOLDER SCREW | 4 | CADMIUM PLATED STEEL | 47B2 | ASSY#1 | | 5D-7279 |
| 59 | GREASE CUP | 2 | S | 46S17 | 1T#1 | CADMIUM PLATED | 6-D-6415 |
| 60 | BALL BEARING GREASE | 1SET | GREASE | 14L3 GRADE 'B' | | #7754-2 | |
| 61 | CEMENT | 1SET | ENAMEL | NAVY SPEC. #5 | | #672-1 | |
| 62 | 1/8 IN PIPE PLUG | 2 | S | 46S17 | 652874 | CADMIUM PLATED | 8-D-6483 |
| 63 | .190-32 x 1/16 LG. FIL. HD. M. SCREW | 4 | S | 4255 | | CADMIUM PLATED | 5-D-4150 |
| 64 | .190 SHAKEPROOF LOCKWASHER | 26 | S | AC936 A10 | 1T#5 | CADMIUM OR ZINC PLATED | 7-B-8426 |
| 65 | END COVER | 1 | S | 47S11 | 1T#1 | | |
| 66 | .190-32 x 1/4 LG. RD. HD. M. SCREW | 4 | S | 4255 | | CADMIUM PLATED | |
| 67 | STUD | 2 | B | 47B2 | 361703 | NICKEL PLATED | 801912 |
| 68 | STUD | 3 | B | 47B2 | 361701 | NICKEL PLATED | 801912 |
| 69 | .190-32 HEX. M. SCR. NUT | 20 | B | 43B11 | | CADMIUM PLATED | |
| 70 | .190 WASHER | 4 | S | 46S17 | 779343 | CADMIUM PLATED | 10-D-172 |
| 71 | TERMINAL BOARD | 1 | MICARTA | 17P5 | 1T#3 | REF. ABOVE 7-B-8424 | 7-B-8440 |
| 72 | INSULATOR | 4 | CERAMIC | PRESTITE | 1176322 | | 50-C-682 |
| 73 | WASHER | 4 | SAE BRASS POLISHED | 39P22 | 1T#2 | | 32-D-190 |
| 74 | COVER | 1 | SH.S. | NAVY SPEC. #5 | 1T#1 | REF. ABOVE 7-B-8424 | 7-B-8429 |
| 75 | BRACKET | 1 | SH.S | 47S11 | 1T#2 | | 7-B-8429 |
| 76 | BRACKET | 1 | SH.S | 47S11 | 1T#3 | | 7-B-8429 |
| 77 | ELASTIC STOPNUT - CLINCH TYPE | 1 | S | 43B11 | 1T#2 | CADMIUM PLATED | 6-D-6487 |
| 78 | .190-32 x 1/16 FIL. HD. M. SCREW | 1 | S | 4255 | | CADMIUM PLATED | |
| 79 | WASHER | 1 | SH.S | 47S11 | 1T#3 | CADMIUM PLATED | 4-D-4820 |
| 80 | .121 DIA x 1/16 TUBULAR RIVET | 4 | B | 43B11 | 349193 | | SL677-2 |
| 81 | CAPACITOR (C-633) | 1 | MICA | RE-154-3885 RE-154-1SAF | 1T#1 | 0.01 MFD W.V. 1500 | 8-D-2576 |
| 82 | .138-32 x 3/16 LG. FIL. HD. M. SCREW | 4 | B | 4255 | | | |
| 83 | .138 SHAKEPROOF LOCKWASHER | 8 | S | AC936 A6 | 1T#1 | CADMIUM PLATED | 5-D-4150 |
| 84 | 3/8-20 x 1 1/2 LG. FIL. HD. M. SCREW | 4 | S | 4255 | | CADMIUM PLATED | |

CONTINUED IN NEXT COLUMN (TOP)

## LIST OF MATERIAL (CONTINUED)

| | | | | | | | |
|---|---|---|---|---|---|---|---|
| 85 | #LOCK WASHER | 8 | MN-SI-U | 46B27 | 570065 | NON-CORR | B60077 |
| 86 | .164-32 x 1/8 LG. HOLDSS SETSCREW | 4 | S | 4255 | 37847 | CADMIUM PLATED | 839111 |
| 87 | LEAD COMP. | 1 | PINK WIRE | 15C1 | ASSY#2 | HV WHITE | 6-D-6789 |
| 88 | LEAD COMP. | 1 | PINK WIRE | 15C1 | ASSY#1 | LV BLACK | 6-D-6789 |
| 89 | CAPACITOR (C-631) | 1 | MICA | RE-154-3885 RE-154-1SAF | 1T#4 | 0.01 MFD W.V. 1500 | 8-D-2576 |
| 90 | .138-32 x 1/16 LG. FIL. HD. M. SCREW | 4 | S | 4255 | | CADMIUM PLATED | |
| 91 | 1/4-20 x 5/16 LG. FIL. HD. M. SCREW | 4 | S | 46S17 | 1T#7 | CADMIUM PLATED | 68-D-421 |
| 92 | WOODRUFF KEY | 1 | S | #406 | | | |
| 93 | .112-40 x 3/16 LG. RD. HD. M. SCREW | 12 | S | 4255 | | CADMIUM PLATED | |
| 94 | #LOCKWASHER | 4 | MN-SI-U | 46B27 | 570066 | NON-CORR | B60077 |
| 95 | #-18 x 1 1/4 LG. FIL. HD. M. SCREW | 4 | S | 4255 | | CADMIUM PLATED | |
| 96 | .150-32 x 3/16 LG. RD. HD. M. SCREW | 2 | S | 4255 | | CADMIUM PLATED | |
| 97 | WEDGE | 1 | MICARTA | 17P5 | 1T#5 | | 97-D-667 |

CONTINUED BELOW

## LIST OF MATERIAL (CONTINUED)

| | | | | | | | |
|---|---|---|---|---|---|---|---|
| 98 | LEAD BUSHING | 1 | BAKELITE | 17P4 | 1T#1 | | 7-D-8540 |
| 99 | NAME PLATE (LUBRICATION) | 2 | SH.B. | 42N2 | | #34713 | |
| 100 | NAME PLATE (ROTATION) | 1 | SH.B. | 42N2 | | #14957 | |
| 101 | NAME PLATE (SERIAL NO.) | 1 | SH.S. | 42N2 | | #36748 | |
| 102 | NAME PLATE (GENERATOR) | 1 | ALUM. ALLOY | 42N2 | TDE | #36532 | |
| 103 | CAPACITOR (C-634) | 1 | MICA | RE-154-3885 RE-154-1SAF | 1T#2 | 0.01 MFD W.V. 1500 | B-D-2576 |
| 104 | CAPACITOR (C-632) | 1 | MICA | RE-154-3885 RE-154-1SAF | 1T#5 | 0.01 MFD W.V. 1500 | B-D-2576 |
| 105 | CAPACITOR (C-631) (C-632) | 1 | MICA | RE-154-3885 RE-154-1SAF | 1T#6 | 0.01 MFD W.V. 1500 | B-D-2576 |
| 106 | CAPACITOR (C-633) (C-634) | 1 | MICA | RE-154-3885 RE-154-1SAF | 1T#3 | 0.01 MFD W.V. 1500 | B-D-2576 |
| 107 | NAME PLATE (GENERATOR) | 1 | ALUM. ALLOY | 42N2 | TDE-1 | #40244 | |

FOR ALL NEW EXTENSIONS SEE TABLES ON DWGS. 36-J-142-145-148 & 160.

USE THIS DWG FOR REQN #698/107 GEN. FOR TDE-1 TRANS. S# 1171118
DATE AUG 2-1943 LX-7024

GENERATOR SPARE PARTS S# 957986 #957988 #957990 #1171119
SPARE PARTS FOR USE WITH — CAY21864
TYPE "FK" FRAME # E186 SEMI-ENCLOSED
.493 K.W. .175/.26 AMP. 2000/550 VOLT.
3450 RPM., D.C. GENERATORS S# 957985 #957987 #957989 #1171118
CASE NO.
GROSS WT. NET WT. 35 LBS.

LEGEND
S STYLE NUMBER
D DRAWING NUMBER
L ELECTRICAL SPECIFICATION NUMBER
NOTE: SUFFIX LETTERS IN CONNECTION WITH IDENTIFYING NUMBERS FOR SPARE PARTS ARE FOR THE INFORMATION OF THE MANUFACTURER AND WILL NOT AFFECT THE MATERIAL FURNISHED ON FUTURE ORDERS.
WHEN REORDERING ALWAYS REFER TO MACHINE SERIAL NUMBER

NO. OF SHEETS 1 SHEET NO. 1

## LIST OF SPARE PARTS AND TOOLS (PER VESSEL)

REPRODUCED FROM MFRS. DRAWING NO. 36-J-141 BUREAU NO. 14 RE 21 J 1637 A
NAMES AND NUMBERS OF VESSELS SEE TITLE BLOCK
APPLICATION: GENERATOR ON TDE RADIO TRANSMITTER ON TDE-1 APPLIANCE D.C. GENERATOR ON MOT. GEN.
NAVY CONTRACT NO. SEE TITLE BLOCK MANUFACTURER W. E. & M. CO.
SHIPBUILDER'S ORDER NO. SEE TITLE BLOCK

| ITEM NO. | NUMBER OF SETS | NUMBER PER SET | NAME OF PART OR TOOL | MANUFACTURER'S DATA: CATALOG OR SERIAL ORDERING DATA | MFRS. DRAWING AND PIECE NO.: PC | DWG. NO. | BUREAU DRAWING AND PIECE NUMBER: DWG. NO. |
|---|---|---|---|---|---|---|---|
| 1 | 1 | 1 | WOUND ARMATURE COMP. (E-631) | D-7-B-8426 ASSY. #1 | 15 | 36-J-141 | |
| 2 | 1 | 1 | FRONT BALL BEARING (NO-8506) (C-631) | D-7-D-8544 1T. #5 | 43 | 36-J-141 | |
| 3 | 1 | 1 | CAPACITOR (C-633, C-634) | D-8-D-2576 1T. #3 | 106 | 36-J-141 | |
| 4 | 1 | 1 | BRUSH HOLDER (LV-3) (E-633) | D-7-B-8430 ASSY. #3 | 46 TO 47 | 36-J-141 | |
| 5 | 1 | 1 | BRUSH HOLDER (LV-4) (E-634) | D-7-B-8430 ASSY. #4 | 48 TO 50 | 36-J-141 | |
| 6 | 10 | 4 | CARBON COMPLETE (E-637) | D-5-D-4331 1T. #4 | 57 | 36-J-141 | |
| 7 | 1 | 4 | BRUSH HOLDER CAP (E-638) | D-5-D-7279 ASSY. #1 | 58 | 36-J-141 | |
| 8 | 1 | 1 | REAR BALL BEARING (NO-8505) (C-632) | D-7-D-8544 1T. #6 | 44 | 36-J-141 | |
| 9 | 1 | 1 | BRUSH HOLDER (HV-4) (E-635) | D-7-B-8431 ASSY. #4 | 51 TO 53 | 36-J-141 | |
| 10 | 1 | 1 | BRUSH HOLDER (HV-3) (E-636) | D-7-B-8431 ASSY. #3 | 54 TO 56 | 36-J-141 | |
| 11 | 1 | 1 | CAPACITOR (C-631, C-632) | D-8-D-2576 1T. #6 | 105 | 36-J-141 | |
| 12 | 2 | 1 | FIELD COIL SET COMPLETE (E-639) | D-7-B-8436 ASSY. #1 | 7 TO 18 | 36-J-141 | |

| NO. | DESCRIPTION | AUTHORITY | APP'D. | DATE |
|---|---|---|---|---|

ALTERATIONS

## —ARMATURE WINDING & INSULATION DATA—

ARMATURE CORE HAS 16 SLOTS. THE 550 VOLT COMMUTATOR HAS 64 BARS & THE 2000 VOLT COMMUTATOR HAS 128 BARS. THE 550 VOLT ARMATURE WINDING HAS 13 TPC OF .008 DIA (#32) S.S.C. ENAMELED COPPER WIRE. THE 2000 VOLT ARMATURE WINDING HAS 33.7 PC OF .0063 DIA (#34) S.S.C. ENAMELED COPPER WIRE. THE ARMATURE HAS 528, 2000 VOLT CONDUCTORS AND 152, 550 VOLT CONDUCTORS PER SLOT.

THE ENDS OF THE FIRST COIL OF THE 550 VOLT WINDING LIE IN BARS #26 & #27. THE 2000 VOLT WINDING IS DIVIDED INTO TWO SETS OF 8 COIL SIDES PER SLOT PER SET. THE ENDS OF THE FIRST COIL IN SET #1 LIE IN BARS #62 & #63. THE ENDS OF THE FIRST COIL IN SET #2 LIE IN BARS #66 & #67. WINDING IS RETROGRESSIVE.

THE INDIVIDUAL COILS OF EACH WINDING ARE WRAPPED WITH .004 TREATED SILK CLOTH. THE 550 VOLT COILS ARE PLACED IN THE BOTTOM OF THE MAIN CELL AND THEN ADDITIONAL FISH PAPER CELLS PLACED ABOVE THEM FOR 2000 VOLT COILS.

COMPLETE WOUND ARMATURE IS TREATED 3 TIMES IN WESTINGHOUSE VARNISH #7669 WITH BAKING 12 HOURS AT 120°C AFTER FIRST TWO TREATMENTS. CONTINUE BAKING AFTER LAST TREATMENT UNTIL INSULATION RESISTANCE CHECKS AT LEAST 50 MEGOHMS.

## —FIELD COIL WINDING & INSULATION DATA—

EACH SHUNT COIL CONSISTS OF 8000 TURNS OF .0089 DIA (#31) ENAMELED COPPER WIRE WOUND ON A MOULD 3¾ IN. LONG BY 2 IN. WIDE AND ⅛ IN. RADIUS BY ½ IN. THICK. SHUNT COIL IS INSULATED FROM SERIES COIL BY TAPING EACH COIL WITH .004 TREATED SILK TAPE, THEN PLACING BETWEEN THE COILS TWO STRIPS OF .005 TREATED CLOTH HELD IN PLACE WITH STRIPS OF SCOTCH TAPE.

THE 550 VOLT SERIES COIL CONSISTS OF 750 TURNS OF .0201 DIA. (#24) ENAMELED COPPER WIRE WOUND OVER ONE SHUNT COIL. THE 2000 VOLT SERIES COIL CONSISTS OF 1400 TURNS OF .0126 DIA. (#28) ENAMELED COPPER WIRE WOUND OVER THE OTHER SHUNT COIL. THE COILS ARE TIED AT THE CORNERS.

THE COILS ARE BENT TO SHAPE AND THEN DIPPED IN W

## DESCRIPTIVE DATA

### (A) IDENTIFICATION

MANUFACTURER WESTINGHOUSE ELEC. & MFG. CO.
MANUFACTURER'S TYPE FK CLASS A FRAME NO. E186-E34
NAVY CONTRACT OR SHIPBUILDER'S ORDER SEE TITLE BLOCK DATE
INSTALLED ON (SEE TITLE BLOCK FOR VESSELS INVOLVED)
FOR USE WITH CAY 21851, CAY 21852 & CAY 21853 MOTORS
MANUFACTURER OF DRIVEN AUXILIARY WESTINGHOUSE ELEC & MFG. CO.
REFERENCE SPECIFICATIONS
THE GENERATORS DESCRIBED HEREUNDER WILL CONFORM STRICTLY WITH NAVY DEPARTMENT SPECIFICATION 17 G 7 INT. (GENERATORS D.C. FOR SHIPBOARD USE) OF MAR 1, 1939 AND OF THE SPECIFICATIONS FOR THE VESSEL. EXCEPT AS SPECIFICALLY ENUMERATED BELOW.
REFERENCE DRAWINGS

| TITLE OF DWG. | MANUFACTURER'S NO. | BU. SHIPS NO. |
|---|---|---|
| | | |
| | | |
| | | |

### (B) MANUFACTURER'S DESCRIPTIVE DATA

GENERATOR CLASSIFICATION
DEGREE OF ENCLOSURE SEMI-ENCLOSED SERVICE-NAVY A
METHOD OF COOLING SELF VENTILATED
SPEED CLASS CONSTANT DUTY CLASSIFICATION CONTINUOUS
VOLTAGE 200/550 R.P.M. 3450 KW. .493
TYPE OF WINDING COMPOUND AMPERES .175 — .26
AMBIENT TEMP 40 °C. CLASS OF INSULATION A
TEMPERATURE RISE, TABLE III METHOD +1 & +2 CONCURRENTLY
MOUNTING (HORIZONTAL OR VERTICAL) HORIZONTAL
DATA MARKED TO APPEAR ON NAME PLATE.

| PERFORMANCE | | EFFICIENCY | AMPERES 2000 V | AMPERES 550 V |
|---|---|---|---|---|
| (A) GUARANTEED | 4/4 | 65% | .175 | .260 |
| (B) GUARANTEED | 3/4 | 62% | .131 | .195 |
| (C) GUARANTEED | 1/2 | 58% | .0875 | .130 |
| (D) | 1/4 | | | |

SPECIAL ATTACHMENTS: NONE

WEIGHTS
(A) GENERATOR COMPLETE 74 LBS. (B) ROTOR COMPLETE 11½ LBS.
(C) ALL SPARES BOXED, INCLUDING CONTROL SPARES ____ LBS.
SHAFT, BEARINGS & LUBRICATION
(A) SHAFT MATERIAL COLD DRAWN CARBON STEEL (B) TYPE OF BEARINGS BALL
(C) BALL BEARING IDENTIFICATION SAE #200 & 205
NAVY TYPE A, CLASS 4 GRADE II MANUFACTURER'S SINGLE SEAL
(D) TYPE OF LUBRICATION GREASE NAVY SYMBOL 14-L-3 GRADE "B"
(E) BEARINGS SHOWN ARE APPROVED BY BALL BEARING MANUFACTURER AS REQUIRED BY PAR 7 c APPENDIX I OF NAVY SPEC. 42-B-5.
BRG. M'F'G. ____ SIGNED ____
POLES
MAIN (A) NO. 2 (B) AIR GAP NOMINAL .030 IN. SINGLE
COMM. (C) NO. ____ (D) AIR GAP NOMINAL ____
ARMATURE
(A) DIAM. 3.375 (B) CORE LENGTH 3⅛
COMMUTATOR
(A) DIAM. 2⅜ (B) LENGTH ½ (C) WEARING DEPTH 1/16 ON DIA.
(D) ½ UNDERCUT (E) INSUL: BET. BARS MICA TO GROUND MICA
BRUSHES
(A) NO. OF STUDS 4 (B) NO. OF BRUSHES PER STUD 1 GRADE HM6165
(C) DIMENSIONS: LENGTH ⅛ WIDTH .279 THICKNESS .216
(D) GRADE: NAVY 0 MANUFACTURER MORGANITE BRUSH CO.
EXCEPTIONS TO NAVY SPECIFICATIONS: SEE NEXT COLUMN.
CAPACITORS

| PIECE NO. | NAVY SYMBOL NO. | MANUFACTURER | MFGR'S DESIGNATION |
|---|---|---|---|
| 81-103-106 | C-633, C-634 | CORNELL DUBILIER | SAS 21010 |
| 89-104-105 | C-631, C-632 | CORNELL DUBILIER | SAS 51010 |

THE POWER SUPPLY FOR EACH MOTOR DRIVING THIS GENERATOR IS AS TABULATED BELOW:—

| STYLE NO. | DRAWING NO. | POWER SUPPLY FOR MOTOR |
|---|---|---|
| 957985 | 38-J-800 | 220/440 VOLT 3 PHASE 60 CYCLES |
| 957987 | 38-J-803 | 115 VOLT D.C. |
| 957989 | 38-J-806 | 230 VOLT D.C. |

### (C) TYPE TESTS

TO BE MADE ONLY ON SELECTED MOTORS REFER TO SPECIFICATION 17-G-7
EFFECTIVENESS OF ENCLOSURE O.K.

EFFICIENCY

| | |
|---|---|
| FULL LOAD I²R LOSSES IN WINDINGS | 79.14 |
| BEARING & BRUSH FRICTION AND WINDAGE | 3.7 |
| CORE LOSSES | 64.16 |
| STRAY LOAD LOSSES | |
| CALCULATED EFFICIENCY AT 1/2 LOAD | 57.3% |
| 3/4 LOAD | 64 % |
| 4/4 LOAD | 68.3% |

RESISTANCE

| | ARM | SH. FLD | SER. FLD | COMM. FLD |
|---|---|---|---|---|
| 26°C | .1228 | 2545 | .0115 | |
| 51°C | .1406 | 2900 | .0131 | |

VOLTAGE REGULATION

| APPROXIMATE PERCENT OF LOAD ON GENERATOR | GENERATOR VOLTAGE HIGH | LOW |
|---|---|---|
| 125% | 1970 | 552 |
| 100% | 2000 | 560 |
| 75% | 2015 | 566 |
| 50% | 2030 | 567 |
| 25% | 2045 | 572 |
| 0% | 2046 | 574 |

### HEATING

NORMAL LOAD HEAT RUN

| TIME | LINE VOLTS | LINE AMPS | SHUNT FLD VOLTS | SHUNT FLD AMPS | TEMPERATURE NO. 1 | NO. 2 | NO. 3 | NO. 4 | NO. 5 | NO. 6 | ROOM |
|---|---|---|---|---|---|---|---|---|---|---|---|
| | 2000 | .175 | | | | | | | | | |
| 1:00 | 560 | .260 | | | 28 | | 28 | | 28 | | 28 |
| 1:30 | " | " | | | 39 | | 40 | | 36 | | 29 |
| 2:00 | " | " | | | 43 | | 44 | | 42 | | 28 |
| 2:30 | " | " | | | 45 | | 46 | | 44 | | 27 |
| 3:00 | " | " | | | 46 | | 47 | | 46 | | 25 |
| 3:30 | " | " | | | 47 | | 48 | | 47 | | 26 |
| 4:00 | " | " | | | 48 | | 49 | | 48 | | 27 |
| TEMP RISE DEGREES C WHILE RUNNING | | | | | 21°C | | 22°C | | 21°C | | |
| TEMP RISE DEGREES C AFTER SHUTDOWN | | | | | 27°C | | 26°C | | 27°C | | |

LOCATION OF THE NUMBER IN THE TABLE NORMAL LOAD HEAT RUN ABOVE SHOULD BE INDICATED
NO. 1 FLD NO. 2 ____ NO. 3 BRG NO. 4 ____ NO. 5 FRAME NO. 6 ____
SHUTDOWN TEMPERATURES ____
ARMATURE CORE ____ COMMUTATOR ____
ARMATURE WINDING ____ FRONT BRG. 40 REAR BRG 51
OVERSPEED 4200
DIELECTRIC STRENGTH N.T. 7000 VOLTS L.T. 3000 VOLTS
INSULATION RESISTANCE 40 MEGOHMS AT 51°C, 70 MEGOHMS AT 26°C

INSPECTOR'S SIGNATURE ____
OFFICE ____ DATE ____

### (D) CONCLUSION

IN VIEW OF THE TEST DATA SHOWN ABOVE AND THE SATISFACTORY HORSEPOWER CAPACITY SPEED CHARACTERISTICS, POWER FACTORS AND EFFICIENCIES WHEN DRIVING THE CONNECTED AUXILIARY THROUGHOUT ITS RANGE OF SPECIFIED OPERATING CONDITIONS AS REPORTED BY I N M ____ LETTER ____ OF 19__, THE MOTORS ARE CONSIDERED AS MEETING SPECIFICATION AND CONTRACT REQUIREMENTS AND SUITABLE FOR THE PURPOSE INTENDED EXCEPT ____

INSPECTOR'S SIGNATURE ____
OFFICE ____ DATE ____

### NOTES

#1 NAVY DEPARTMENT MATERIAL SPECIFICATION OF ISSUE IN EFFECT MARCH 1, 1939 ARE APPLICABLE (1st ITEM)
#2 #10 THREADS (.190 DIA., 32 THDS PER INCH) TO BE IN ACCORDANCE WITH NATIONAL FINE THREAD SERIES PER 17GTINT PAR. C10C. ALL OTHER THREADS TO BE IN ACCORDANCE WITH NATIONAL COARSE THD SERIES PER 17GT INT. PAR C10D UNLESS OTHERWISE SPECIFIED.
#3 CADMIUM PLATING TO BE IN ACCORDANCE WITH NAVY DEPT. SPEC. 46P1.
#4 ALL METAL SURFACES INSIDE OF MOTOR PROTECTED WITH A COAT OF ZINC CHROMATE PRIMER. (WESTINGHOUSE #212-T) (NAVY AERO. SPEC. P27-b)
#5 THIS MATERIAL IS EQUIVALENT, TO OR BETTER THAN THE COMMERCIAL GRADE KNOWN AS SILICON STEEL, ELEC. GRADE.
#6 A MIXTURE OF SHELLAC AND GUMS IN ALCOHOL WITH A PLASTICIZER AND LOADED WITH RED IRON OXIDE. (WESTINGHOUSE #672-1.)
#7 A MOLDED FIBRE TUBE. (WESTINGHOUSE #5857-2)
#8 A STANDARD BLACK BAKELITE MOLDED OVER A THREADED BRASS INSERT.
#9 THIS CUP WILL MEET NAVY SPEC. 45C7, TYPE D, EXCEPT CUP WILL BE MADE OF STEEL AND CADMIUM PLATED PER NAVY SPEC. 46P1 IN LINE WITH CHIEF OF BU. SHIPS LETTER S63-1(3660) EN 28/A2-11 DATED 2-7-42. THIS CUP IS CATALOG STYLE #GR-7403 SIZE 000, AMERICAN STAMPING CO, BATTLE CREEK, MICH.
#10 A HIGH-STRENGTH SINTERED MOLDED CERAMIC. (WESTINGHOUSE "PRESTITE")
#11 (SEE BOTTOM, THIS COLUMN.)

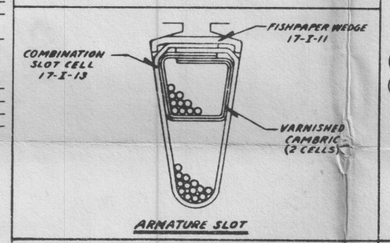

ARMATURE SLOT

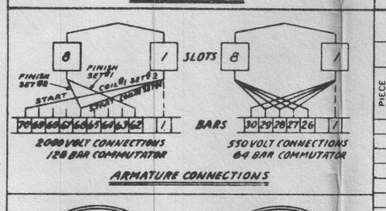

ARMATURE CONNECTIONS

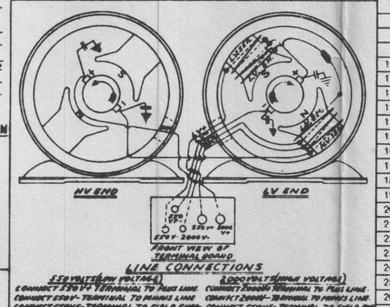

LINE CONNECTIONS

FOR 550 VOLT (SHUNT VOLTAGE) CONNECT 550 V. TERMINAL TO THIS LINE. CONNECT 550 V. TERMINAL TO MAIN LINE. CONNECT 550 V. TERMINAL TO FIELD RHEOSTAT AND THENCE TO FIELD V. TERMINAL.

FOR 2000 VOLT (SHUNT VOLTAGE) CONNECT 2000 V. TERMINAL TO THIS LINE. CONNECT 2000 V. TERMINAL TO MAIN LINE. CONNECT 550 V. TERMINAL TO FIELD RHEOSTAT AND THENCE TO FIELD V. TERMINAL. (IF NOT ALREADY CONNECTED FOR 550 VOLT)

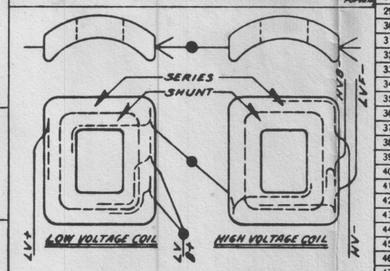

FIELD COILS

### EXCEPTIONS TO NAVY SPEC. 17G7

#1 E-3a THE FRAME RING IS MADE OF SEMI-STEEL INSTEAD OF STEEL.
#2 C-7d(6) PRE-HEATING OF FIELD COILS AND ARMATURE BEFORE VARNISH DIPPING IS OMITTED.
#3 WESTINGHOUSE #6109 & #7669 VARNISH HEAT ENDURANCE TEST IS 250 HOURS (GRADE BB VARNISH NAVY SPEC. 52 V13 REQUIRES 500 HOURS.
#4 E-12c BRUSHHOLDERS ARE CARTRIDGE TYPE, NOT ADJUSTABLE.
#5 E-8c COMMUTATOR IS SECURED TO SHAFT BY PRESS FIT.
#6 E-8d WEARING DEPTH IS 1/16 IN. ON DIAMETER.
#7 E-6b BEARINGS ARE SINGLE SEALED WITH NO SUPPLEMENTARY HOUSING SHIELD. A ROTATING OIL FLINGER IS ASSEMBLED ON THE SHAFT ADJACENT TO THE BEARING.
#8 CREEPAGE DISTANCE TO GROUND 1/8 IN.
DISTANCE THRU AIR TO GROUND 1/8 IN.
CREEPAGE DISTANCE TO OPPOSITE POLARITY 2 IN.
DISTANCE THRU AIR TO OPPOSITE POLARITY 2 IN.
#9 E-3b NO EYEBOLTS ARE PROVIDED FOR LIFTING OF THE GENERATOR
#10 E-13a BRUSHES ARE GRADE HM 6165 MANUFACTURED BY MORGANITE BRUSH CO.
#11 E-7b ARMATURE LAMINATIONS ARE NOT CLAMPED.
#12

### NOTES CONTINUED

#11 THIS MATERIAL IS BRIGHT ANNEALED, HALF HARD, COLD ROLLED CARBON STEEL (A.I.S.I. SPEC. # C-1070) AND IS ZINC PLATED TO MEET (NAVY SPEC 46P2) OF ISSUE APRIL 1, 1938.

NOT TO SCALE

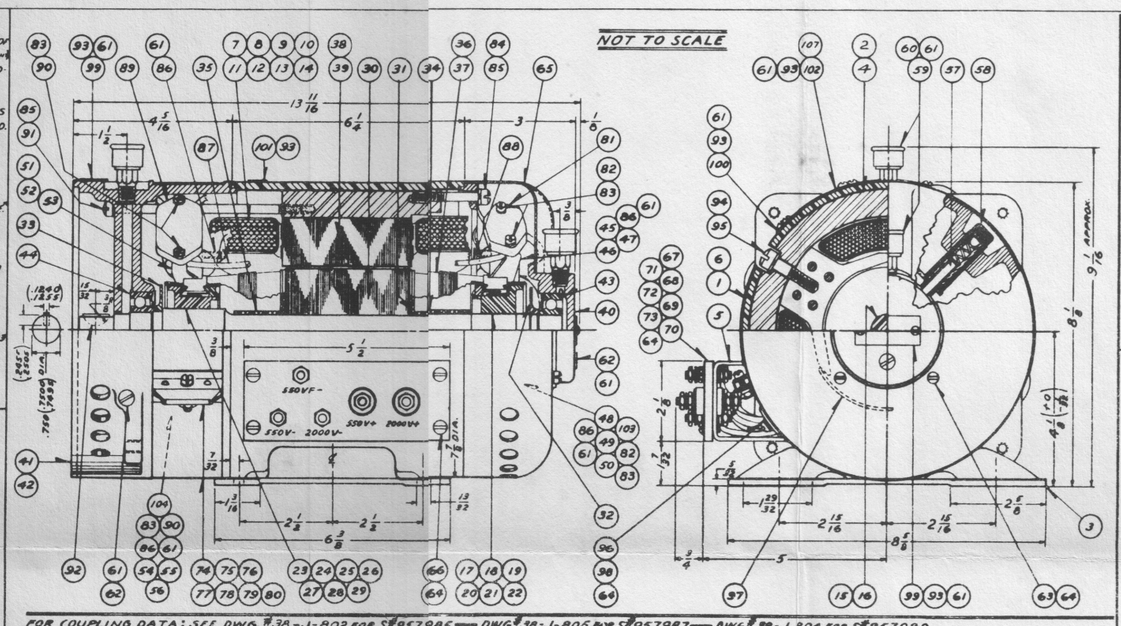


FOR COUPLING DATA: SEE DWG. #38-J-802 FOR S# 957986 — DWG. #38-J-805 FOR S# 957987 — DWG. #38-J-804 FOR S# 957989

## LIST OF MATERIAL

QUANTITIES ARE FOR ONE MACHINE

| PIECE NO. | NAME OF PIECE | NO. REQ'D | MAT'L | NAVY SPEC. LATEST ISSUE | STYLE NO. | REMARKS | CONTRACTORS DRAWING NO. |
|---|---|---|---|---|---|---|---|
| 1 | FRAME | 1 | SH.S. | 47511 | 1T#1 | | 6-B-9598 |
| 2 | FRAME RING | 1 | H.T.C.I. | 4615 | 1T#1 | | 7-B-8435 |
| 3 | FOOT | 1 | SH.S | 47511 | 987805 | | 39-B-690 |
| 4 | PIN | 2 | S. | 46517 | 416711 | | 332116 |
| 5 | TERMINAL BOARD BRACKET | 2 | SH.S. | 47511 | 1T#1 | | 7-D-8502 |
| 6 | PIN | 1 | S. | 46517 | 1T#3 | | 32-D-402 |
| 7 | FIELD WINDING | 1 | D.S.N. COTTON | 15W2 | 1TS #9 to #5 | 550 V. 2000 V. | L-407785 |
| 8 | SPLICE LEAD | 6 | FIBER WIRE | 15C1 | 1T#4 | | 7-D-8573 |
| 9 | LEAD | 2 | FIBER WIRE | 15C1 | 1T#7 | | 6-D-6315 |
| 10 | LEAD COMP. | 1 | FIBER WIRE | 15C1 | ASSY #2 | LV F- BLACK | 6-D-6788 |
| 11 | LEAD COMP. | 1 | FIBER WIRE | 15C1 | ASSY #3 | NV- WHITE | 6-D-6788 |
| 12 | LEAD COMP. | 1 | FIBER WIRE | 15C1 | ASSY #1 | LV+ BLACK | 6-D-6788 |
| 13 | LEAD COMP. | 1 | FIBER WIRE | 15C1 | ASSY #1 | BLACK | 6-D-6790 |
| 14 | LEAD COMP. | 1 | FIBER WIRE | 15C1 | ASSY #5 | WHITE | 5-D-7128 |
| 15 | ARMATURE COMPLETE | REF. | | KS1A to 37 | ASSY #1 | | 7-B-8424 |
| 16 | SHAFT | 1 | S.BAR | 46S17 | 1T#1 | | 7-B-8424 |
| 17 | V-RING | 1 | S.BAR | 46S17 | 1T#2 | | 7-B-8454 |
| 18 | V-RING | 1 | MICA | 17M5 | 1T#3 | | 7-B-8454 |
| 19 | V-RING | 1 | MICA | 17M5 | 1T#4 | | 7-B-8454 |
| 20 | STRIP | 64 | MICA | 17M5 | 1T#7 | | 7-B-8454 |
| 21 | BUSHING | 1 | S.BAR | 46S17 | 1T#3 | | 7-B-8454 |
| 22 | COMMUTATOR BAR | 64 | CU | 47C2 | 1T#10 | LV | 7-B-8454 |
| 23 | BUSHING | 1 | S.BAR | 46S17 | 1T#1 | | 7-B-8454 |
| 24 | V-RING | 1 | S.BAR | 46S17 | 1T#2 | | 7-B-8454 |
| 25 | V-RING | 1 | MICA | 17M5 | 1T#3 | | 7-B-8454 |
| 26 | V-RING | 1 | MICA | 17M5 | 1T#4 | | 7-B-8454 |
| 27 | COMMUTATOR BAR | 128 | CU | 47C2 | 1T#5 | NV | 7-B-8464 |
| 28 | STRIP | 64 | MICA | 17M5 | 1T#6 | | 7-B-8454 |
| 29 | STRIP | 64 | MICA | 17M5 | 1T#7 | | 7-B-8454 |
| 30 | ARMATURE PUNCHING | 1SET | FIBER SHEET | 5T93506 | 4696 LBS | | 350078 |
| 31 | ARMATURE INSULATING PCHS. | 4 | MICARTA | 17P5 | 1T#13 | | 350079 |
| 32 | OIL FLINGER | 1 | S.BAR | 46S17 | 1T#2 | | 6-D-6783 |
| 33 | OIL FLINGER | 1 | S.BAR | 46S17 | 1T#1 | | 6-D-6783 |
| 34 | INSULATING BUSHING | 1 | MICARTA | 17P5 | 406839 | | 816008 |
| 35 | INSULATING BUSHING | 1 | MICARTA | 17P5 | 406867 | | 816008 |
| 36 | ARMATURE INSULATION MAT'L | 1 | FIBER SHEET | 5T93506 | GROUP #1 | | 1-D-2856 |
| 37 | ARMATURE WINDING | 1 | D.S.N. COTTON | 15W2 | 1TS #1-2 | | L-407785 |
| 38 | POLE PUNCHING | 2-SETS | SH.S. | 47511 | 277179 | 2 SETS PER POLE | 356295 |
| 39 | RIVET | 8 | S.BAR | 46S13 | 1T#21 | 4 PER POLE | 816315 |
| 40 | FRONT BRACKET LV | 1 | M.I. | 4638 | 1T#1 | NO RAIN SHIELD | 7-A-5632 |
| 41 | REAR BRACKET HV | 1 | M.I. | 4638 | 1T#1 | NO RAIN SHIELD | 7-A-5634 |
| 42 | PIN | 1 | S | 46S17 | 1T#3 | | 32-D-402 |
| 43 | FRONT BALL BEARING | 1 | S | 42B5 | 1T#5 | | 7-D-8544 |
| 44 | REAR BALL BEARING | 1 | S | 42B5 | 1T#6 | | 7-D-8544 |
| 45 | INSERT | 1 | B | 47B2 | 1T#1 | | 7-B-8430 |
| 46 | TERMINAL | 1 | B | 47B2 | 1T#3 | LV-3 | 7-B-8430 |
| 47 | BUSHING | 1 | FIBRE | | 1T#4 | | 7-B-8430 |
| 48 | INSERT | 1 | B | 47B2 | 1T#1 | | 7-B-8430 |
| 49 | TERMINAL | 1 | B | 47B2 | 1T#2 | LV-4 | 7-B-8430 |
| 50 | BUSHING | 1 | FIBRE | | 1T#4 | | 7-B-8430 |
| 51 | INSERT | 1 | B | 47B2 | 1T#1 | | 7-B-8430 |
| 52 | TERMINAL | 1 | B | 47B2 | 1T#3 | HV-4 | 7-B-8431 |
| 53 | BUSHING | 1 | FIBRE | | 1T#4 | | 7-B-8430 |
| 54 | INSERT | 1 | B | 47B2 | 1T#1 | | 7-B-8430 |
| 55 | TERMINAL | 1 | B | 47B2 | 1T#2 | HV-3 | 7-B-8431 |
| 56 | BUSHING | 1 | FIBRE | | 1T#4 | | 7-B-8430 |
| 57 | CARBON COMPLETE | 4 | CARBON | 1788 | 1T#4 | NM-6165 | 5-D-4331 |
| 58 | BRUSH HOLDER SCREW | 4 | MACHINE BRASS | 47B2 | ASSY #1 | | 50-7279 |
| 59 | GREASE CUP | 2 | S | | 1T#1 | CADMIUM PLATED | 6-D-6015 |
| 60 | BALL BEARING GREASE | 1SET | GREASE | 1413 | | #7754-2 | |
| 61 | CEMENT | 1SET | ENAMEL | | | #672-1 | |
| 62 | ¼" IN PIPE PLUG | 2 | S | 46S17 | 652874 | CADMIUM PLATED | 816483 |
| 63 | .190-32 NC LG. FIL. HD. M. SCREW | 4 | S | 4255 | | CADMIUM PLATED | |
| 64 | .190 SHAKEPROOF LOCKWASHER | 26 | S | AC936 A10 | 1T#5 | CADMIUM OR ZINC PLATED | 5-D-6150 |
| 65 | END COVER | 1 | S | 47511 | 1T#1 | | 7-B-8426 |
| 66 | .190-32 NC LG. RD. HD. M. SCREW | 4 | S | 4255 | | CADMIUM PLATED | |
| 67 | STUD | 2 | B | 4782 | 361703 | NICKEL PLATED | 801912 |
| 68 | STUD | 3 | B | 4782 | 361701 | NICKEL PLATED | 801912 |
| 69 | .190-32 HEX. M. SCR. NUT | 20 | B | 43B11 | | CADMIUM PLATED | |
| 70 | .190 WASHER | 4 | S | 46S17 | 779343 | CADMIUM PLATED | 10-D-172 |
| 71 | TERMINAL BOARD | 1 | MICARTA | 17P5 | 1T#9 | | 7-B-8440 |
| 72 | INSULATOR | 4 | CERAMIC | | 1176322 | | 50-C682 |
| 73 | WASHER | 4 | OIL PROOF PACKING | 39P22 | 1T#2 | | 32-D-190 |
| 74 | COVER | 1 | SH.S. | | 1T#1 | | 7-B-8429 |
| 75 | BRACKET | 1 | SH.S | 47511 | 1T#2 | | 7-B-8429 |
| 76 | BRACKET | 1 | SH.S | 47511 | 1T#3 | | 7-B-8429 |
| 77 | ELASTIC STOPNUT - CLINCH TYPE | 1 | S | 43B11 | 1T#2 | CADMIUM PLATED | 6-D-6487 |
| 78 | .190-32 NC LG. FIL. HD. M. SCREW | 1 | S | 4255 | | CADMIUM PLATED | |
| 79 | WASHER | 1 | SH.S | 47511 | 1T#3 | CADMIUM PLATED | 4-D-4820 |
| 80 | .121 DIA x 3/16 TUBULAR RIVET | 4 | B | 43B11 | 549193 | | SL677-2 |
| 81 | CAPACITOR (C-633) | 1 | MICA | | 1T#1 | | 8-D-2576 |
| 82 | .138-32 NC LG. FIL. HD. M. SCREW | 4 | B | 4255 | | | |
| 83 | .138 SHAKEPROOF LOCKWASHER | 8 | S | AC936 A6 | 1T#1 | CADMIUM OR ZINC PLATED | 5-D-6150 |
| 84 | ¼-20 x 1¼ NC LG. FIL. HD. M. SCREW | 4 | S | 4255 | | CADMIUM PLATED | |

CONTINUED IN NEXT COLUMN (TOP)

## LIST OF MATERIAL (CONTINUED)

| | | | | | | | |
|---|---|---|---|---|---|---|---|
| 85 | ¼" LOCK WASHER | 8 | NH-St-Cd | 46B27 | 570065 | NON-CORR | 860077 |
| 86 | .164-32 NC LG. HD. SLOTS SET SCREW | 4 | S | 4235 | 37847 | CADMIUM PLATED | 839111 |
| 87 | LEAD COMP. | 1 | #14 x 7 FIBRE WIRE | 15C1 | ASSY #2 | HV WHITE | 6-D-6789 |
| 88 | LEAD COMP. | 1 | FIBRE WIRE | 15C1 | ASSY #1 | LV BLACK | 6-D-6789 |
| 89 | CAPACITOR (C-631) | 1 | MICA | AN-1T4-350V 0.0082 MFD | 1T#4 | 0.01 MFD W.V.D.C. 1500 | 8-D-2576 |
| 90 | .138-32 NC LG. FIL. HD. M. SCREW | 4 | S | 4255 | | CADMIUM PLATED | |
| 91 | #-20 x 3/8 LG. FIL. HD. M. SCREW | 4 | S | 46S17 | 1T#7 | CADMIUM PLATED | 68-D-821 |
| 92 | WOODRUFF KEY | 1 | S | #406 | | | |
| 93 | .112-40 NC LG. RD. HD. M. SCREW | 12 | S | 4255 | | CADMIUM PLATED | |
| 94 | ¼" LOCKWASHER | 4 | NH-St-Cd | 46B27 | 570066 | NON-CORR | 860077 |
| 95 | ¼-18 x 1/2 LG. FIL. HD. M. SCREW | 4 | S | 4255 | | CADMIUM PLATED | |
| 96 | .190-32 NC LG. RD. HD. M. SCREW | 2 | S | 4235 | | CADMIUM PLATED | |
| 97 | WEDGE | 1 | MICARTA | 17P5 | 1T#5 | | 97-D-667 |

CONTINUED BELOW

## LIST OF SPARE PARTS AND TOOLS (PER VESSEL)

REPRODUCED FROM MFRS. DRAWING NO. 38-J-801 BUREAU NO. 14 RE 21 J 1638 A
NAMES AND NUMBERS OF VESSELS SEE TITLE BLOCK
APPLICATION: GENERATOR ON TDE-2. RADIO TRANS. APPLIANCE D.C. GENERATOR ON TDE-2
NAVY CONTRACT NO. SEE TITLE BLOCK MANUFACTURER W. E. & M. CO.
SHIPBUILDER'S ORDER NO. SEE TITLE BLOCK

| ITEM NO. | NUMBER OF SETS | NUMBER OF PIECES | NAME OF PART OR TOOL | MFR'S CATALOG OR SERIAL ORDERING DATA | MFRS DRAWING AND PIECE NO. PC | MFRS DRAWING AND PIECE NO. DWG. NO | BUREAU DRAWING AND PIECE NUMBER DWG. NO. |
|---|---|---|---|---|---|---|---|
| 1 | 1 | 1 | WOUND ARMATURE COMP. (E-631) | D-7-B-8424 ASSY. #1 | 15 | | |
| 2 | 1 | 1 | FRONT BALL BEARING (NO-8506) (O-631) | D-7-D-8544 IT. #5 | 43 | | |
| 3 | 1 | 1 | CAPACITOR (C-633, C-634) | D-8-D-2576 IT. #3 | 106 | | |
| 4 | 2 | 1 | BRUSH HOLDER (LV-3) (E-633) | D-7-B-8430 ASSY. #3 | 46 TO 47 | | |
| 5 | 2 | 1 | BRUSH HOLDER (LV-4) (E-634) | D-7-B-8430 ASSY. #4 | 48 TO 49 | | |
| 6 | 10 | 4 | CARBON COMPLETE (E-637) | D-5-D-4331 IT. #4 | 57 | 38-J-801 | |
| 7 | 1 | 4 | BRUSH HOLDER CAP (E-638) | D-5-D-7279 ASSY. #1 | 58 | | |
| 8 | 1 | 1 | REAR BALL BEARING (NO-8506) (O-632) | D-7-D-8544 IT. #6 | 44 | | |
| 9 | 2 | 1 | BRUSH HOLDER (HV-4) (E-635) | D-7-B-8431 ASSY. #4 | 51 TO 53 | | |
| 10 | 2 | 1 | BRUSH HOLDER (HV-3) (E-636) | D-7-B-8431 ASSY. #3 | 50 TO 52 | | |
| 11 | 1 | 1 | CAPACITOR (C-631, C-632) | D-8-D-2576 IT. #6 | 105 | | |
| 12 | 2 | 1 | FIELD COIL SET COMPLETE (E-638) | D-7-B-8436 ASSY. #1 | 7 TO 14 | | |

GENERATOR SPARE PARTS S# 11711181-A, 11711182-A, 11711183-A
SPARE PARTS FOR USE WITH CAY 21854
TYPE "FK" FRAME E186 SEMI-ENCLOSED
.493 KW., .175/.26 AMP. 2000/550 VOLT, 3450 RPM., D.C. GENERATORS
S# 957985, 957987, 957989
CASE NO. ____
GROSS WT. ____ NET WT. 35 LBS.

LEGEND
S STYLE NUMBER
D DRAWING NUMBER
L ELECTRICAL SPECIFICATION NUMBER
NOTE: SUFFIX LETTERS IN CONNECTION WITH IDENTIFYING NUMBERS FOR SPARE PARTS ARE FOR THE INFORMATION OF THE MANUFACTURER AND WILL NOT AFFECT THE MATERIAL FURNISHED ON FUTURE ORDERS.
WHEN REORDERING ALWAYS REFER TO MACHINE SERIAL NUMBER

NO. OF SHEETS 1 SHEET NO. 1

## LIST OF MATERIAL (CONTINUED)

| | | | | | | | |
|---|---|---|---|---|---|---|---|
| 98 | LEAD BUSHING | 1 | BAKELITE | 17P4 | 1T#1 | | 7-D-8640 |
| 99 | NAME PLATE (LUBRICATION) | 2 | SH.S. | 42N2 | | #39713 | |
| 100 | NAME PLATE (ROTATION) | 1 | SH.S. | 42N2 | | #14957 | |
| 101 | NAME PLATE (SERIAL NO.) | 1 | SH.S. | 42N2 | | #36748 | |
| 102 | NAME PLATE (GENERATOR) | 1 | ALUM ALLOY | 42N2 | TDE-2 | #40366 | |
| 103 | CAPACITOR (C-634) | 1 | MICA | AN-C-25C-350V 0.0082 MFD ±10% | 1T#2 | 0.01 MFD W.V.D.C. 1500 | 8-D-2576 |
| 104 | CAPACITOR (C-632) | 1 | MICA | AN-C-25C-350V 0.0082 MFD ±10% | 1T#1 | 0.01 MFD W.V.D.C. 1500 | 8-D-2576 |
| 105 | CAPACITOR (C-631) (C-632) | 1 | MICA | AN-C-25C-350V 0.0082 MFD ±10% | 1T#6 | 0.01 MFD W.V.D.C. 1500 | 8-D-2576 |
| 106 | CAPACITOR (C-633) (C-634) | 1 | MICA | AN-C-25C-350V 0.0082 MFD ±10% | 1T#3 | 0.01 MFD W.V.D.C. 1500 | 8-D-2576 |
| 107 | NAME PLATE (GENERATOR) | 1 | ALUM ALLOY | 42N2 | TDE-2 | #40590 | |

FOR ALL NEW EXTENSIONS SEE TABLES ON DWGS. 38-J-802, 38-J-804, 38-J-805

### ARMATURE WINDING & INSULATION DATA

ARMATURE CORE HAS 16 SLOTS. THE 550 VOLT COMMUTATOR HAS 64 BARS & THE 2000 VOLT COMMUTATOR HAS 128 BARS. THE 550 VOLT ARMATURE WINDING HAS 19 T.P.C. OF .808 DIA. (#20) S.S.C. ENAMELED COPPER WIRE. THE 2000 VOLT ARMATURE WINDING HAS 33 T.P.C. OF .0063 DIA. (#34) S.S.C. ENAMELED COPPER WIRE. THE ARMATURE HAS 528, 2000 VOLT CONDUCTORS AND 152, 550 VOLT CONDUCTORS PER SLOT.

THE ENDS OF THE FIRST COIL OF THE 550 VOLT WINDING LIE IN BARS #26 & #27. THE 2000 VOLT WINDING IS DIVIDED INTO TWO SETS OF 8 COIL SIDES PER SLOT PER SET. THE ENDS OF THE FIRST COIL IN SET #1 LIE IN BARS #62 & #63. THE ENDS OF THE FIRST COIL IN SET #2 LIE IN BARS #66 & #67. WINDING IS RETROGRESSIVE.

THE INDIVIDUAL COILS OF EACH WINDING ARE WRAPPED WITH .004 TREATED SILK CLOTH. THE 550 VOLT COILS ARE PLACED IN THE BOTTOM OF THE MAIN CELL AND THEN ADDITIONAL FISH PAPER CELLS PLACED ABOVE THEM FOR 2000 VOLT COILS.

COMPLETE WOUND ARMATURE IS TREATED 3 TIMES IN WESTINGHOUSE VARNISH #7669 WITH BAKING 12 HOURS AT 120°C AFTER FIRST TWO TREATMENTS. CONTINUE BAKING AFTER LAST TREATMENT UNTIL INSULATION RESISTANCE CHECKS AT LEAST 50 MEGOHMS.

### FIELD COIL WINDING & INSULATION DATA

EACH SHUNT COIL CONSISTS OF 8000 TURNS OF .0089 DIA. (#31) ENAMELED COPPER WIRE WOUND ON A MOULD 3¼ IN. LONG BY 2 IN. WIDE AND ⅛ IN. RADIUS BY ⅛ IN. THICK. SHUNT COIL IS INSULATED FROM SERIES COIL BY TAPING EACH COIL WITH .004 TREATED SILK TAPE, THEN PLACING BETWEEN THE COILS TWO STRIPS OF .005 TREATED CLOTH HELD IN PLACE WITH STRIPS OF SCOTCH TAPE.

THE 550 VOLT SERIES COIL CONSISTS OF 750 TURNS OF .0201 DIA. (#24) ENAMELED COPPER WIRE WOUND OVER ONE SHUNT COIL. THE 2000 VOLT SERIES COIL CONSISTS OF 1600 TURNS OF .0126 DIA. (#28) ENAMELED COPPER WIRE WOUND OVER THE OTHER SHUNT COIL. THE COILS ARE TIED AT THE CORNERS.

THE COILS ARE BENT TO SHAPE AND THEN DIPPED IN WESTINGHOUSE VARNISH #6109 AND BAKED 14 HOURS AT 120°C. LEADS ARE ATTACHED AND BOUND TIGHTLY TO COIL, APPROXIMATELY ONE TURN OF 16 OF .005 CABLE BEING USED BETWEEN LEADS AND WIRE OF SHUNT WINDING AND THE 2000 VOLT SERIES WINDING TO PROTECT THE WINDING. LEAD JOINTS ARE SOLDERED AND INSULATED WITH ONE LAYER OF .004 TREATED SILK CLOTH, ONE LAYER OF .012 FRICTION TAPE AND A CELL OF .004 TREATED CLOTH.

COILS ARE THEN TAPED OVER ALL WITH ONE LAYER OF .010 TREATED CLOTH AT LEAST ½ OVERLAPPED AND FOLLOWED WITH ONE LAYER OF .007 COTTON TAPE ½ OVERLAPPED. COILS ARE THEN GIVEN 3 SEALING COATS OF WESTINGHOUSE VARNISH #6109. EACH COAT IS APPLIED BY DIPPING FOR 1 MINUTE AND BAKING 8 HOURS AT 120°C EXCEPT CONTINUE FINAL BAKING UNTIL INSULATION RESISTANCE CHECKS AT LEAST 50 MEGOHMS.

THE 2000 VOLT LEADS ARE 16 OF .010 CABLE INSULATED WITH CELLULOSE BUTYRATE AND WOVEN GLASS. THE 550 VOLT LEADS ARE 41 OF .010 RUBBER AND COTTON INSULATED CABLE.

| NO. | DESCRIPTION | AUTHORITY | APP'D. | DATE |
|---|---|---|---|---|
| | ALTERATIONS | | | |

**WESTINGHOUSE ELECTRIC & MFG. CO.**
**LIMA WORKS, LIMA OHIO, U.S.A.**

DRWG. NO. 38-J-801 SHEET 1 OF 1 SHEET
DRA