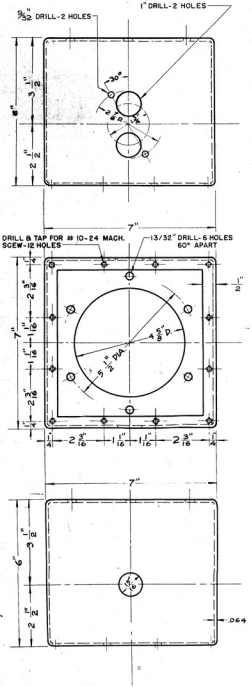

2 BOX

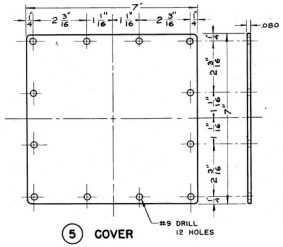

5 COVER

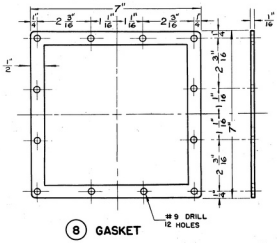

8 GASKET

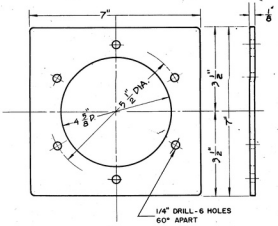

9 GASKET

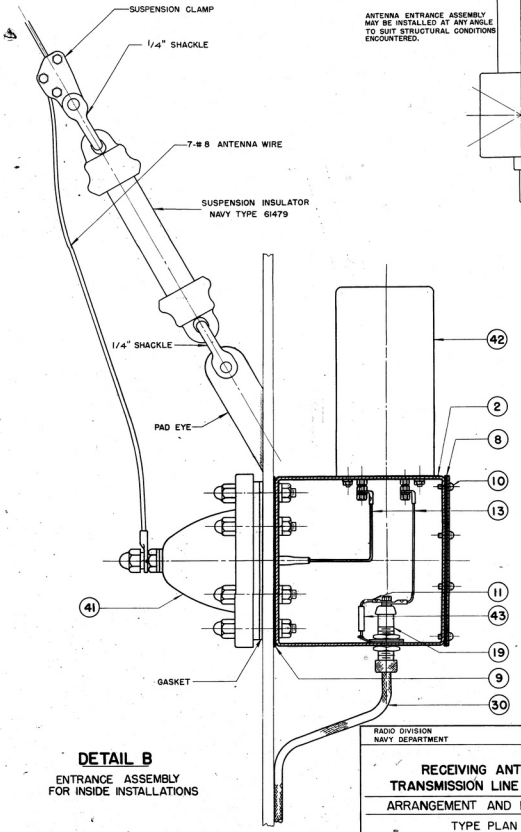

ANTENNA ENTRANCE ASSEMBLY MAY BE INSTALLED AT ANY ANGLE TO SUIT STRUCTURAL CONDITIONS ENCOUNTERED.

DETAIL B

ENTRANCE ASSEMBLY FOR INSIDE INSTALLATIONS

RADIO DIVISION
NAVY DEPARTMENT

BUREAU OF SHIPS
WASHINGTON, D.C.

RECEIVING ANTENNA TRANSMISSION LINE SYSTEM

ARRANGEMENT AND DETAILS

TYPE PLAN

SCALE: 6" = 1 FT. DATE: 4 OCT. 1944

RE 62F 151

SHEET 3C OF 5

N.B.S. 391-2